Proposal for Restoration of the Salton Sea

"Scientific Geothermal Technology"

– Power Point Presentation –

SMU – Power Plays Conference, Dallas, TX - May 18-20, 2015

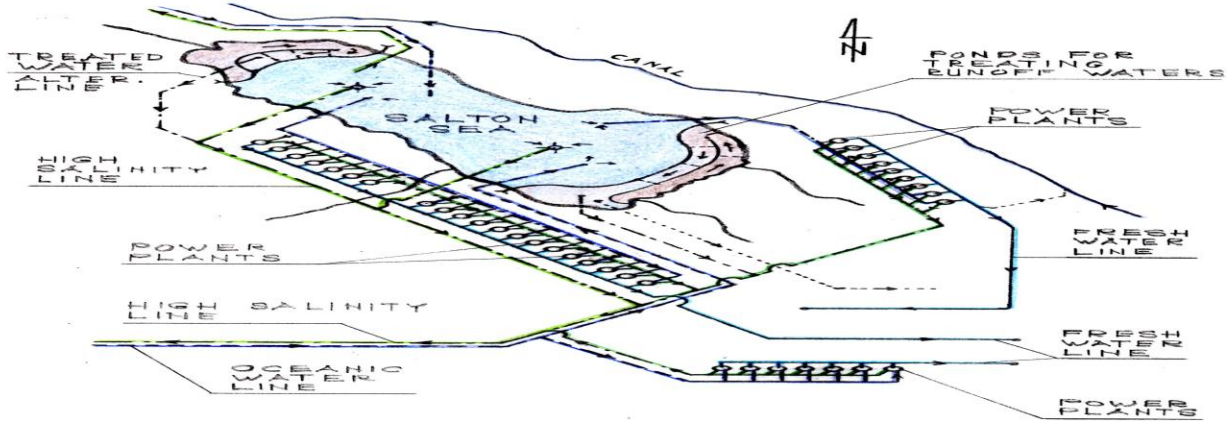

Author: **Nikola N. Lakic,** Graduate Engineer Architect,
GEOTHERMAL WORLDWIDE, INC.
78-365 Hwy 111, #402, La Quinta, CA 92253
www.GeothermalWorldwide.com
760-347-1609

OVERVIEW OF THE SALTON SEA SITUATION

- **The Salton Sea is California's largest lake and is presently 50 percent saltier than the Ocean. The Salton Sea is a "terminal lake," meaning that it has no outlets. Water flows into it from several limited sources but the only way water leaves the sea is by evaporation.**

- **The lake is shrinking exposing the lake bed and precipitating higher salinity levels and environmental issues as well as a serious threat to its multi-billion-dollar tourist trade.**

- **There is strong possibility that starting in a year 2017 - the 1/3 of inflow water from the canal will be diverted to San Diego, which would speed up the disappearance of the Salton Sea.**

- **Runoff water from nearby agricultural fields which contains fertilizers, pesticides and other pollutants from Mexicali contaminate Salton Sea and make it an undesirable tourist destination especially for beach goers.**

- **The lake is 35 miles long, 10 miles wide, and is located south of Palm Springs in a basin 230 feet below sea level.**

- **The Earth's crust at the south end of the Salton Sea is relatively thin. Temperature in the Salton Sea Geothermal Field can reach 680 ºF (360 ºC) less than a mile below the surface.**

THE OBJECTIVES OF THE ENCLOSED PROPOSAL FOR RESTORATION OF THE SALTON SEA

1. **Raising and stabilizing the lake's waterline level;**

2. **Preventing further pollution of the lake and treating farmland runoff waters;**

3. **Providing wildlife sanctuary**;

4. **The equalizing salinity of the salty terminal lake (Salton Sea) water with salinity of the Ocean;**

5. **Providing conditions for tourism** and making Salton Sea a renewed **recreational destination**; and

6. **Harnessing prevalent geothermal source** of the Salton Sea Geothermal Field (SSGF) for generation of electricity; and

7. **Production of fresh water;**

SUMMARY OF PROPOSAL FOR RESTORATION OF THE SALTON SEA CONSISTS OF FIVE PHASES:

- **Phase I** - **Connecting the Salton Sea with the Ocean** (San Diego/Oceanside area) with several pipelines (inflows and outflows);
- **Phase II** - **Building two main dikes** - One in northern and one in southern part of the Salton Sea.
- **Phase III** - **Building one power plant** using (SCI-GHE) system at one of selected sector;
- **Phase IV** - **Building several more power plants** using (SCI-GHE) system - one in each selected sector; and
- **Phase V** - **Continued buildup** of additional power plants using (SCI-GHE) system at each selected sector;

Summary of the Proposal for Restoration of the Salton Sean

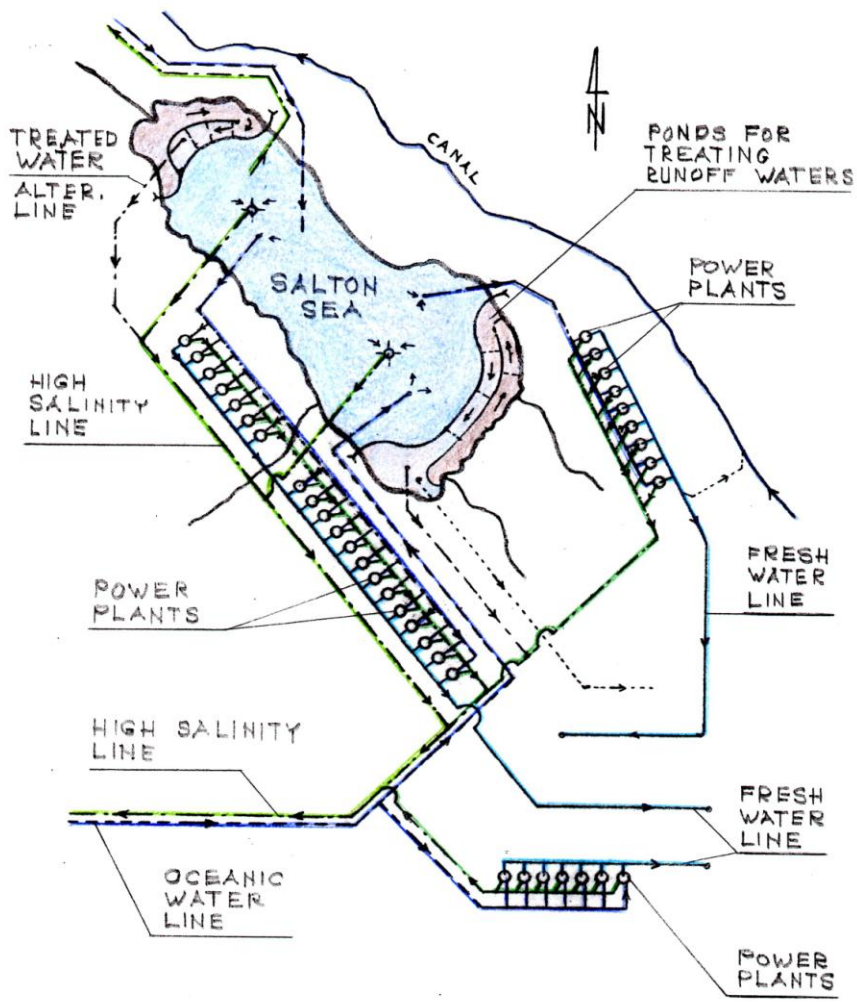

- **Phase I**: **Connecting the Salton Sea with Pacific Ocean** with pipelines for controlling waterline level of the lake and exchanging waters **and providing conditions for tourism.**
- **Phase II: Production of two sets of dikes –** one in northern and one in southern part of the Salton Sea forming ponds for **treatment of farmland runoff water and providing wildlife sanctuary, and separating (now) oceanic water in the central part of the lake.**
- **Phase III: Production of the first Power Plant with SCI-GHE system using geothermal sources for production of electricity and fresh water.**
- **Phase IV: Production of two additional power plants on two additional sectors.**
- **Phase V: Continued buildup of subsequent Power Plants at each sector.**

ABOUT THE "SCIENTIFIC GEOTHERMAL TECHNOLOGY"

- **The proposal for restoration of the Salton Sea implements the Scientific Geothermal Technology modified so to include local conditions.**

- **The Scientific Geothermal Technology consists of:**
  - **The Self Contained In-Ground Geothermal Generator (SCI-GGG);**
  - **The Self Contained Heat Exchanger (SCI-GHE); and**
  - **The IN-LINE PUMP) ;**

- **Several designs and variations complementing each other and/or operating separately in many different energy sector applications.**

- **The In-Line Pump should be used for two way pipelines connecting the Salton Sea with Pacific Ocean because this system requires the least energy for operation.**

- **As a first option for electricity generating unit, to be implemented, for this proposal is the (SCI-GHE) system**. It has less production capacity than the **(SCI-GGG) system**, but is less expensive to produce and to implement.. **Later on** when the (SCI-GHE) system starts generating revenue it can be replaced with (SCI-GGG) system which at this stage requires more investment and time for full development.

- **It is well known that there is an enormous source of energy under our feet whether it is a few miles underground or on the surface in locations such as Hawaii. The question was, until now, how to harness it expediently and efficiently?**

ABOUT THE SCIENTIFIC GEOTHERMAL TECHNOLOGY
- SUMMARY of the "Self Contained In-Ground Heat Exchanger" (SCI-GHE) system -

The function of the "Self Contained In-Ground Heat Exchanger" (SCI-GHE) system consists of several stages:

1. **Extracting heat** from prevalent geothermal sources;

2. **Transferring heat up** to the ground surface **through completely closed loop system** (no need for geothermal fluid to be pumped to the surface as is the case with conventional geothermal systems);

3. **Using extracted heat** from geothermal sources **for generation of electricity** for commercial and residential use; and

4. **Producing fresh water** as a byproduct without spending additional energy for its production.

5. **Application for** harnessing heat from **Flare Stack;**

6. **Application for** harnessing heat from established **lava flow / lava tube / lava lake;**

ENERGY OVERVIEW IN GENERAL

- **As population on our planet increases** there is constantly **increasing demand for electricity**.

- **Nuclear, Oil** and **Coal** burning Power Plants with their **waste material** are **pollutant** with **serious consequences** for our environment and our existence.

- Most of renewable energy technologies including **solar and wind** have serious **limitations** such as weather conditions.

- **In summary** – **It is well known that enormous energy** is under our feet – whether it is a few miles **underground** or on the **surface** in locations such as **Hawaii,** the **Erta Ale** volcano, the **East African Rift,** etc**.** The question was, until now, how to **harness it expediently and efficiently**?

The "Self Contained In-Ground Geothermal Generator" (SCI-GGG) system

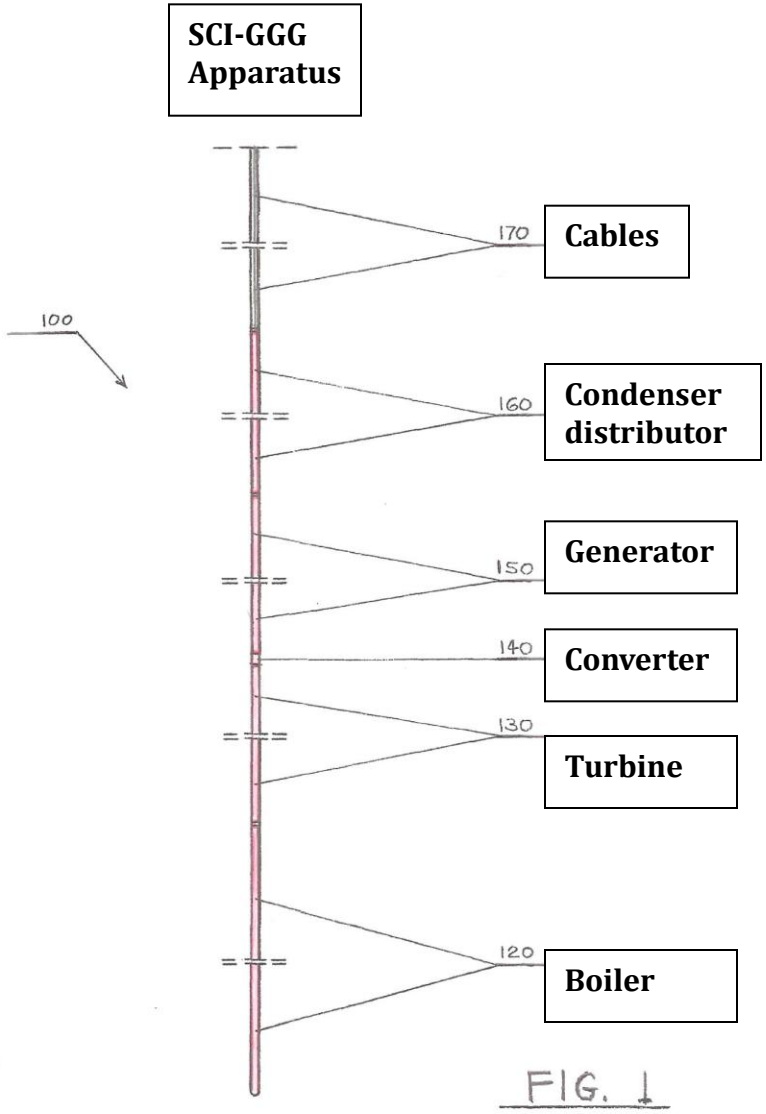

The SCI-GGG system uses several completely closed loop systems and generates electricity down at the heat source and transmits it up to the ground level by means of electrical cables.

The SCI-GGG system consist of:

- **A BOILER;**
- **A TURBINE;**
- **A CONVERTER;**
- **A GENERATOR;**
- **A CONDENSER DISTRIBUTOR;**
- **CONDENSER** and COOLING system (not illustrated here); and
- **CABLES**

GEOTHERMAL WORLDWIDE, INC.

SCI-GGG System

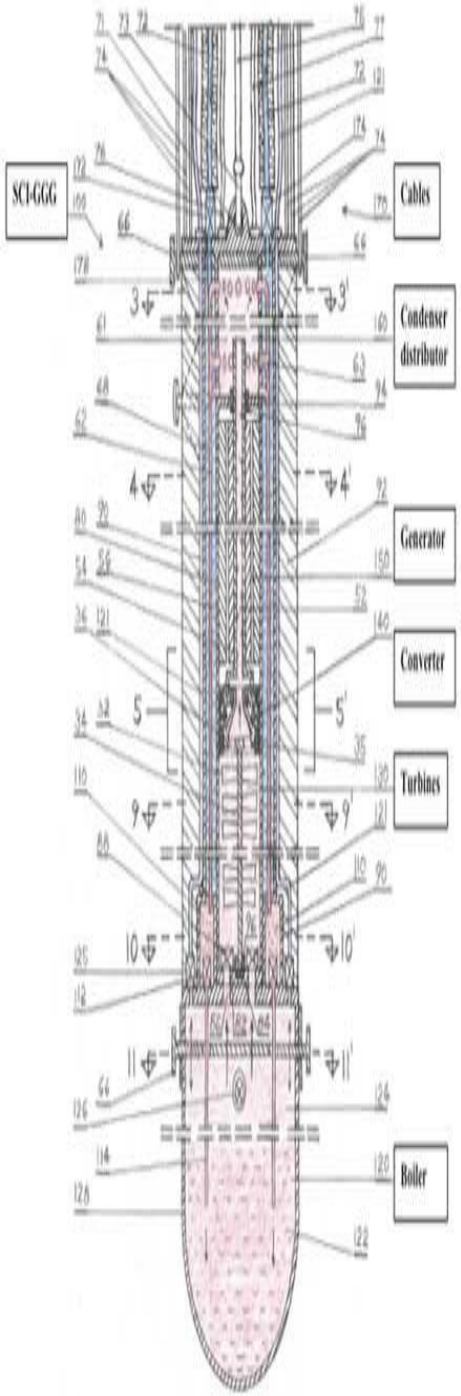

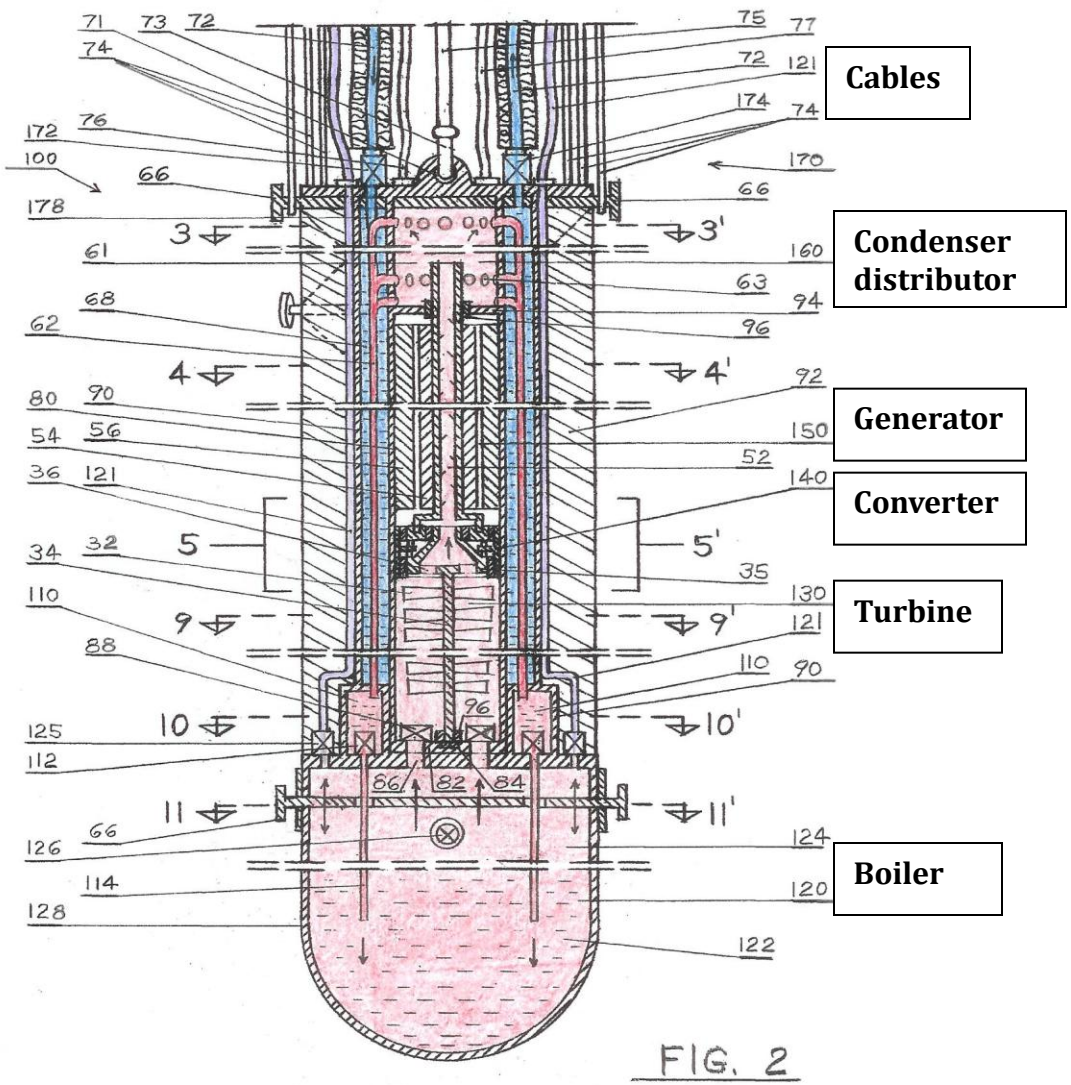

FIG. 2

GEOTHERMAL WORLDWIDE, INC.

Self Contained In-Ground Geothermal Generator (SCI-GGG)

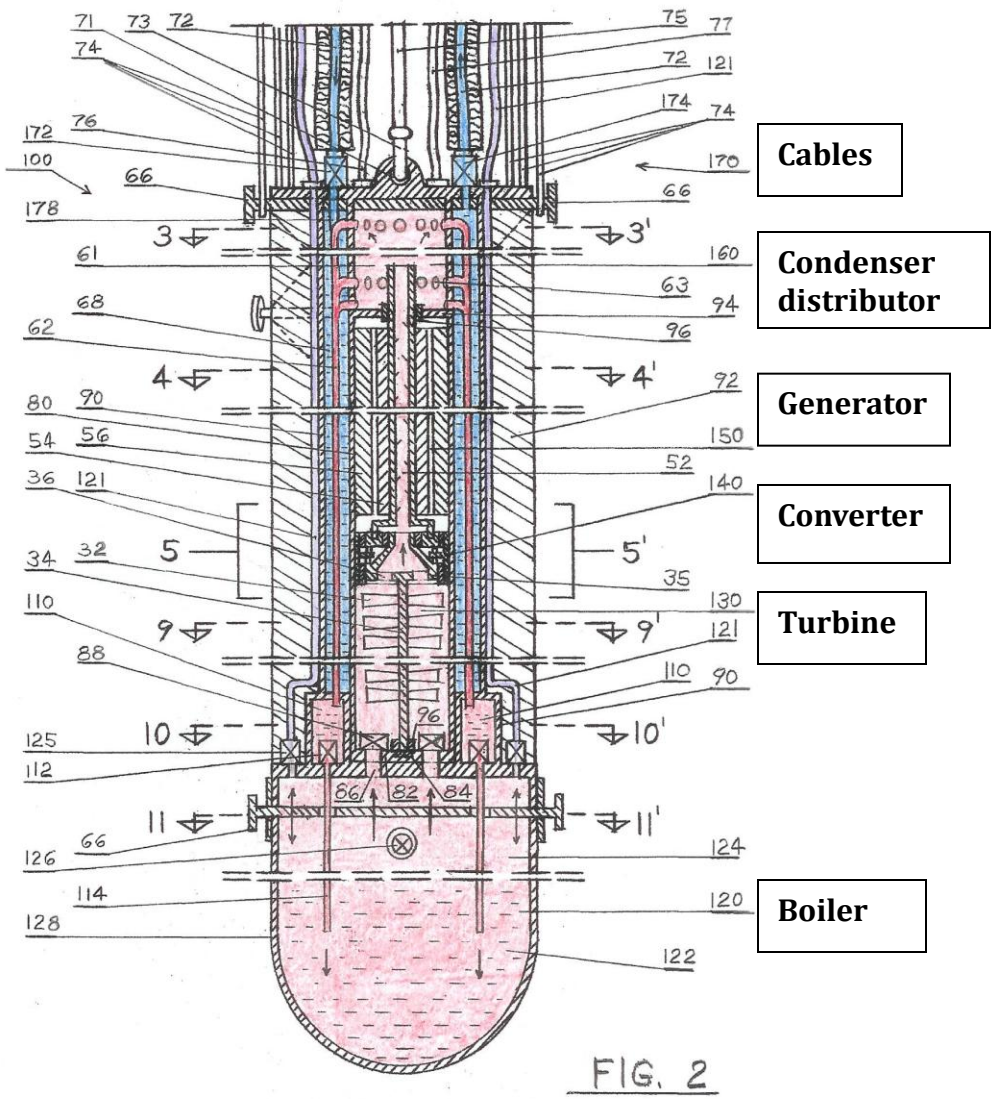

The (SCI-GGG) method for harnessing geothermal energy to produce electricity consists of:

- Lowering a (SCI-GGG) apparatus into pre-drilled well bore at the source of heat;
- The (SCI-GGG) apparatus consists of: a boiler; a turbines; a converter; a generator; a condenser distributor; and a condenser that are arranged to function in confined spaces such as in a well bore.
- The SCI-GGGG absorbs heat from source of heat (hot rocks or reservoir) and generates electricity which is transmitted by cable to the ground surface to electrical grids for use in houses and industry.
- In the process of cooling the engine compartments with a separate closed loop system "Self Contained In-Ground Heat Exchanger" (SCI-GHE system), additional electricity is generated on the site.

Cross-sectional views of the SCI-GGG System - Figs. 3 & 4

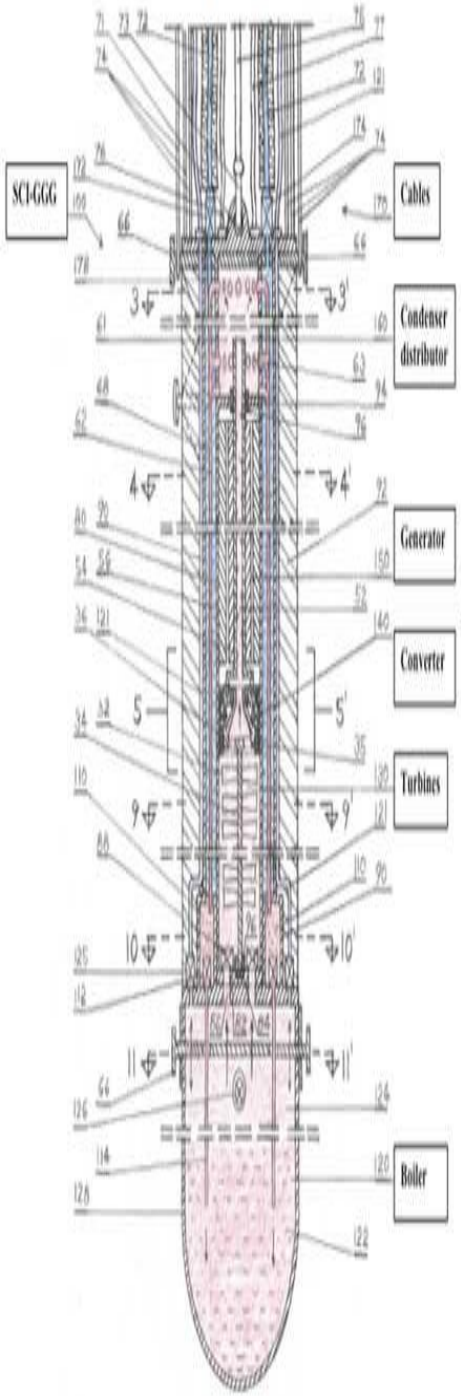

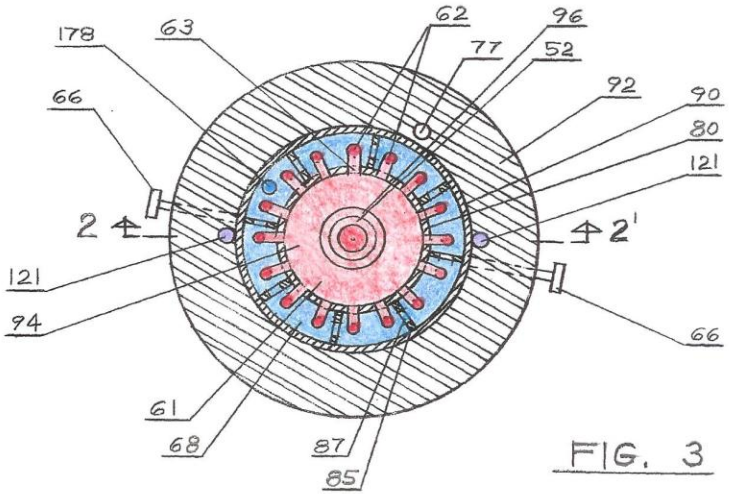

FIG. 3

- **Cross-sectional view of the SCI-GGG apparatus taken along line 3-3' of the FIG. 2 through Condenser Distributor**

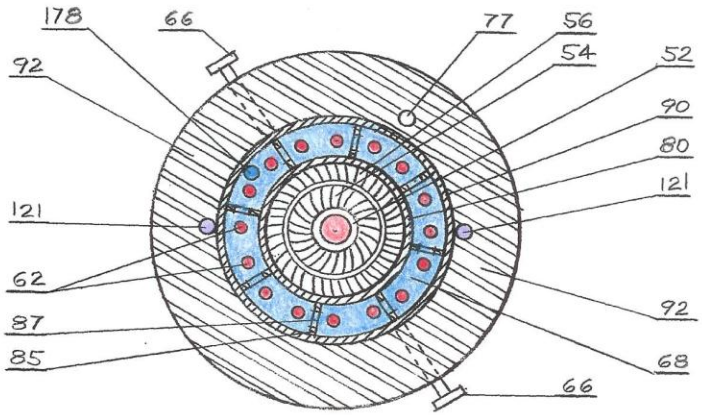

FIG. 4

- **Cross-sectional view of the SCI-GGG apparatus taken along line 4-4' of the FIG. 2 through Generator**

Self Contained In-Ground Geothermal Generator (SCI-GGG system)

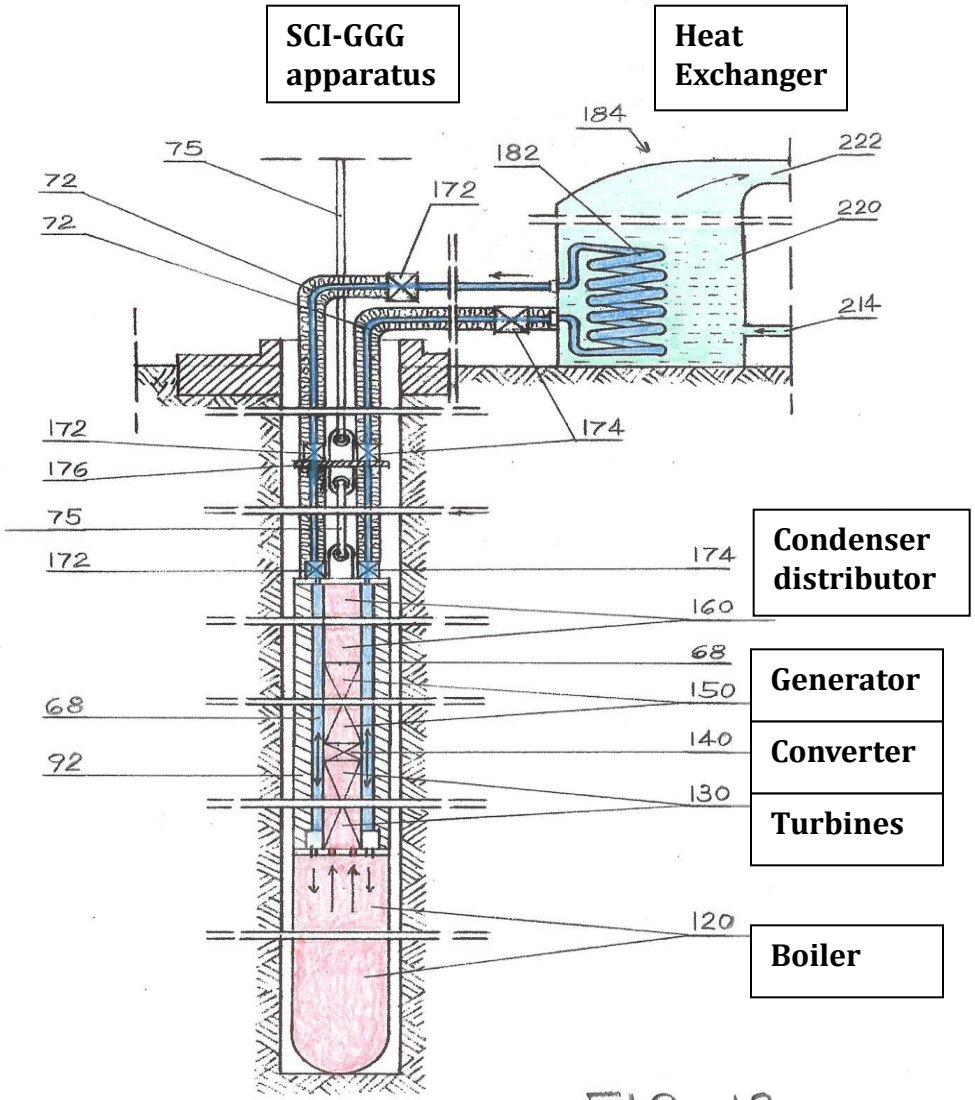

FIG. 12

- The SCI-GGG apparatus uses three (3) closed loop systems:
- A first closed loop systems (rosy color) circulates working fluid through a Boiler, Turbine, Generator, Condenser, and back through Boiler.
- A second closed loop systems (blue color) "the Self Contained In-Ground Heat Exchanger (SCI-GHE system)" circulates fluid through the condenser; thermally insulated houses; and a Heat Exchanger coupled to the binary power unit on the ground surface.
- The "Self Contained In-Ground Heat Exchange" (SCI-GHE system) is an integral part of the SCI-GGG system and can be used separately as an independent Heat Exchanger.
- A third closed loop systems (greenish color) circulates working fluid through a binary power unit on the ground surface and generates additional electricity.

GEOTHERMAL WORLDWIDE, INC.

The "Self Contained In-Ground Heat Exchanger" (SCI-GHE system)

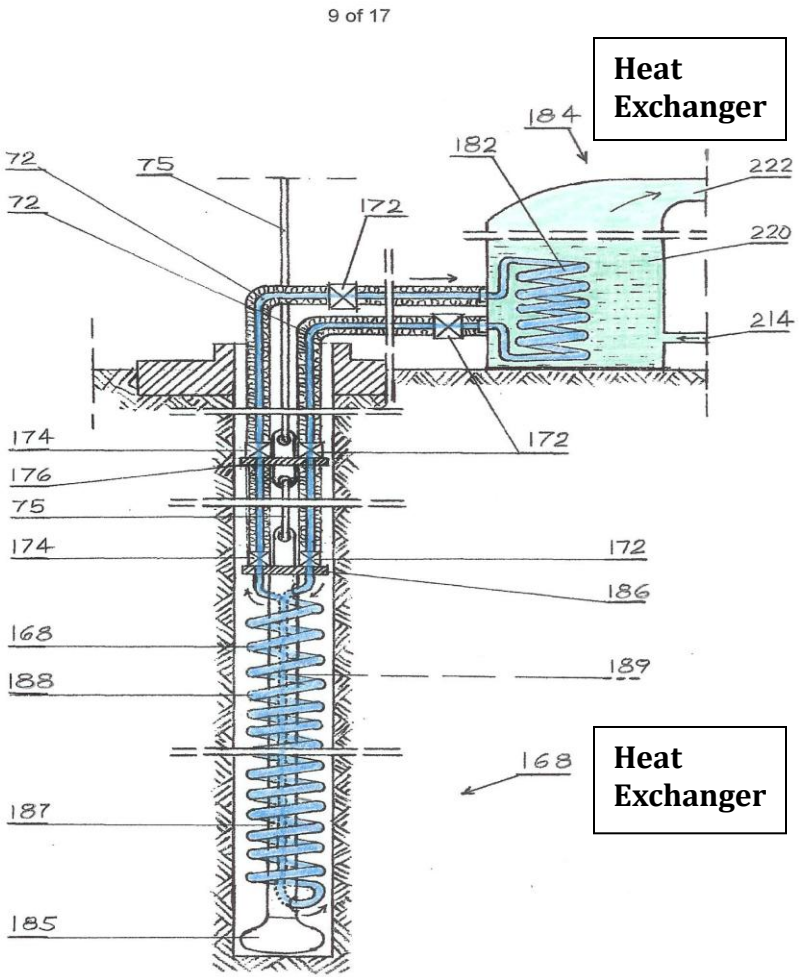

FIG. 13

- The (SCI-GHE) apparatus is an integral part of the "Self Contained In-Ground Geothermal Generator" (SCI-GGG system) and is used separately as an independent Heat Exchanger apparatus.

- The (SCI-GHE) apparatus consist of: two coils (Heat Exchangers); a closed loop of thermally insulated pipes/houses 72; at least one In-Line Pump 172; and a Binary Power Unit 184.

- The first coil (Heat Exchanger) 168 of the first closed loop systems is located at the bottom of the well at heat source and the second coil (Heat Exchanger) 182 is coupled into boiler of the Binary Power Unit on the ground surface which operates as a second closed loop system - the Organic Rankine Cycle (ORC) – which generates electricity.

- Alternatively, the (SCI-GHE) and/or (SCI-GHE) apparatus can be scaled to be used for extracting heat from abandon and marginal wells.

- The first coil (HE) at the bottom of well bore is structurally sound and can support its weight.

Scientific Geothermal Technology
SCI-GGG and SCI-GHE systems - side by side

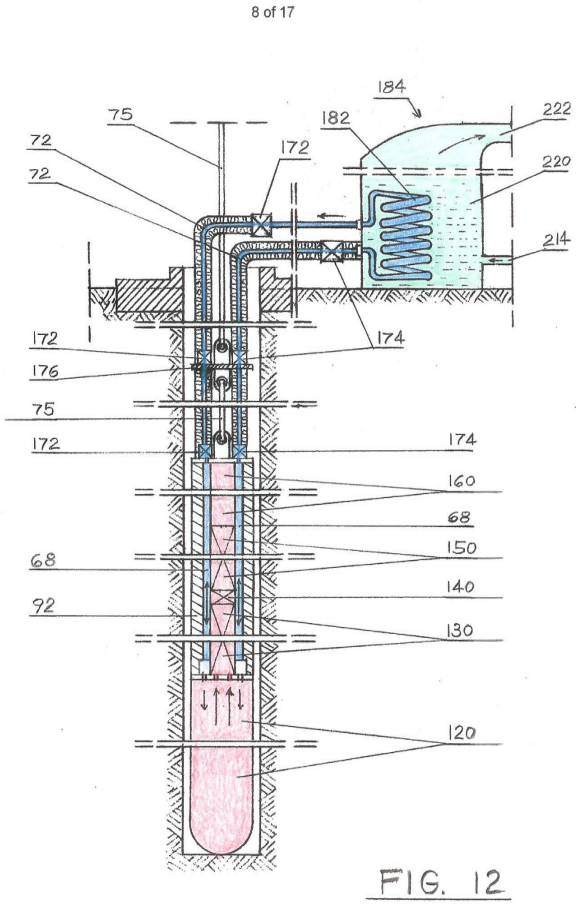

SCI-GGG system

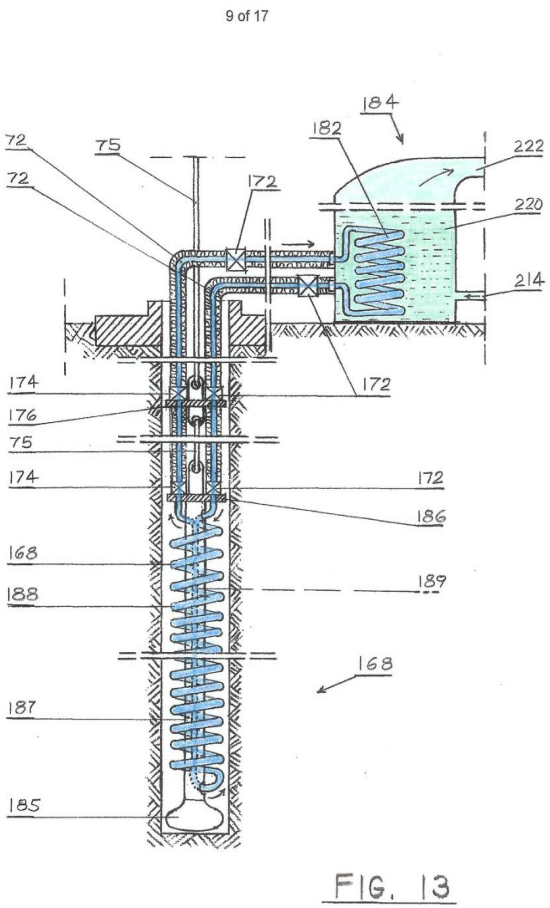

SCI-GHE system

- **The SCIG-GGG system generates electricity down at the heat source and transmits it up to the ground level by means of electrical cables.**
- **The SCIG-GGG system generate additional electricity on the ground surface.**
- **The (SCI-GHE) system is an integral part of the (SCI-GGG) system and can be used separately as an independent Heat Exchange Apparatus.**
- **The (SCI-GHE) system has, the less production capacity than (SCI-GGG) system but it is easier to build and maintain.**
- **Alternatively, the (SCI-GHE) and/or (SCI-GHE) apparatus can be scaled for extracting heat from abandon and marginal wells.**
- **The Scientific Geothermal Technology doesn't require hydrothermal reservoirs, although is not limited to dry hot rocks.**

GEOTHERMAL WORLDWIDE, INC.

Cross-sectional view of the "In-Line Pump" taken along line 22-22' of FIG. 23

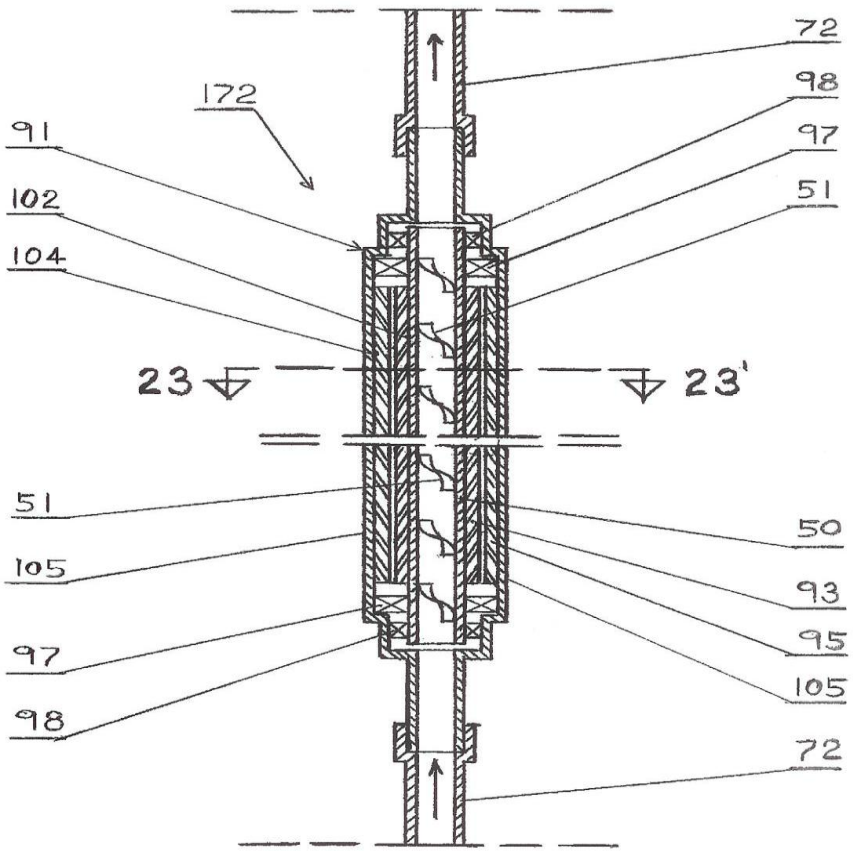

FIG. 22

- The In-Line-Pump 172 is an integral part of both SCI-GGG and SCI-GHE systems, circulating fluids through closed loop systems.
- The In-Line-Pump 172 is an electromotor cylindrical shape and is inserted as a repetitive segment in pipeline.
- It has a hollow cylinder shaft of the rotor with spiral blades inside hollow shaft.
- Yields maximum flow rate with limited diameter.

Cross-sectional view of the In-Line Pump taken along line 23-23' of FIG. 22

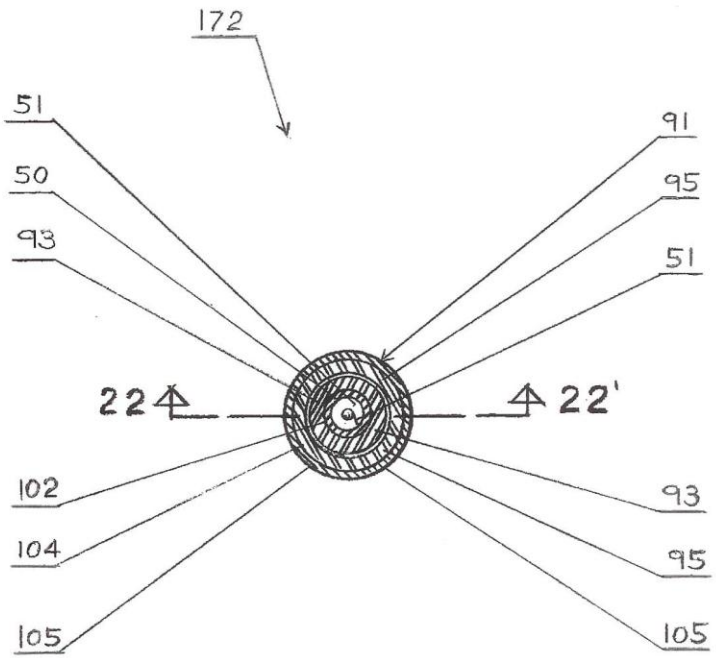

FIG. 23

- **Alternatively, the In-Line-Pump 172 can be inserted as a repetitive segment of a raiser pipe for pumping fluids up to the ground surface from reservoirs in which geo-pressure is low.**
- **Also, the In-Line-Pump 172 can be used in cross-country pipeline for oil, gas, water, etc., as a repetitive segment.**
- **In downhill route it function as a generator and generates electricity, which can be used to supplement In-Line-Pumps 172 in horizontal and uphill route.**

Schematic Cross-Sectional Diagram of an Universal Heat Exchange System 210

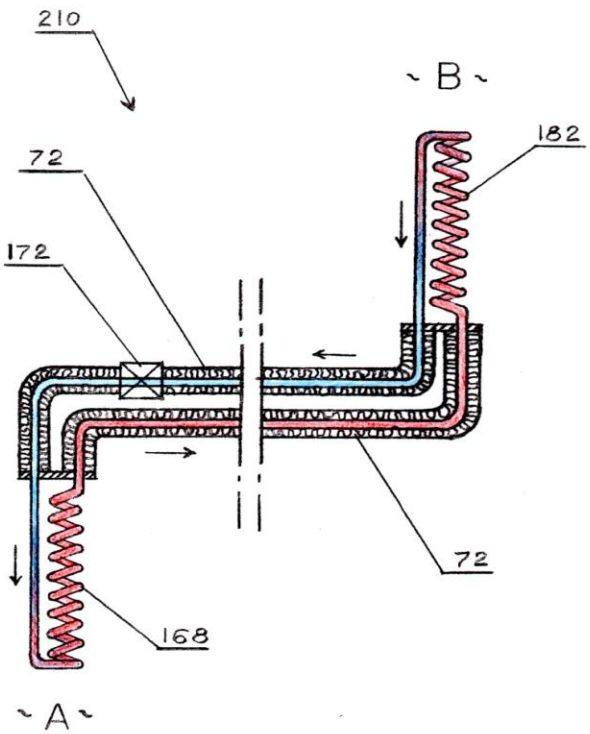

FIG. 24

FIG. 24 illustrate an schematic cross sectional diagram of an universal heat exchange system 210 with main segments including:

- **A thermally insulated close loop line 72 with an in-line pump 172;**
- **A first heat exchanger 168 positioned in heat source environment "A"; and**
- **A second heat exchanger 182 positioned in preferred environment "B";**
- **Heat is extracted from heat source through the first heat exchanger 168 and transferred through thermally insulated line 72 to the second heat exchanger 182 for external use including production of electricity.**
- **The universal heat exchange system 210 is a portable unite and can be used in many applications.**

Schematic Plan View of a Power Plant for Production of Electricity in locations such as Hawaii by using SCI-GHE System

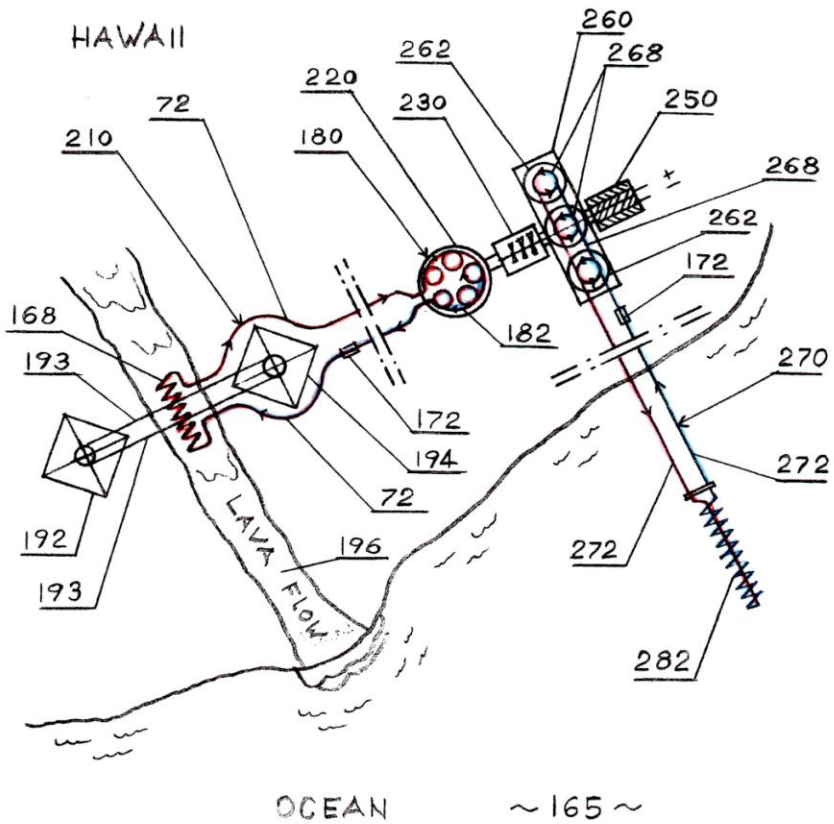

FIG. 26

- Two posts/towers 192 and 194 erected on either side of established lava flow/tube 196 with cable 193 suspended between them.
- The first heat exchanger 168 is lowered at safe distance, close to lava flow 196, and the second heat exchanger 182 is coupled into boiler/evaporator 220 of the binary power unit 180.
- Heat exchangers 168 and 182 are connected with thermally insulated closed loop system 210.
- Power unit 180 consist of a boiler 220 a turbine 230, a generator 250, and a condenser 260.
- Cooling system for the condenser 260 consisting of additional closed loop system 270 with heat exchanger 282 submerged into Ocean 165.

GEOTHERMAL WORLDWIDE, INC.

Cross-sectional view of a Power Plant for Production of Electricity from heat source such as Oil Well Flare Stacks by using SCI-GHE System

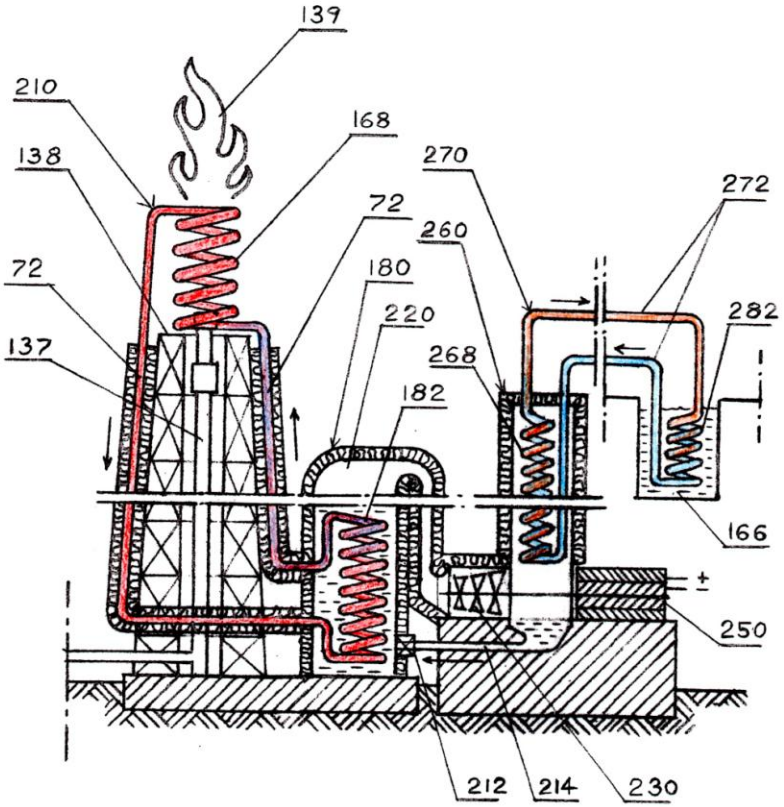

FIG. 27

- Flare stack 137 has support structure 138.
- The heat exchange system 210 with the first heat exchanger 168 positioned on top of the supporting structure 138 and the second heat exchanger 182 coupled into boiler/evaporator 220 of the binary power unit 180.
- Heat from flame 139 is extracted through the first heat exchanger 168 and transferred through thermally insulated line 72 to the second heat exchanger 182.
- Binary power unit 180, has a boiler 220, turbines 230, a generator 250, and condenser 260.
- Condenser 260 is cooled with additional closed loop system 270 consisting of the first heat exchanger 268, closed loop line 272 and the second heat exchanger 282 which can be submerged into nearby source of cold water.

Schematic Plan View of a Power Plant for Production of Electricity and an Alternative for Desalinization of the Salton Sea by using SCI-GHE System

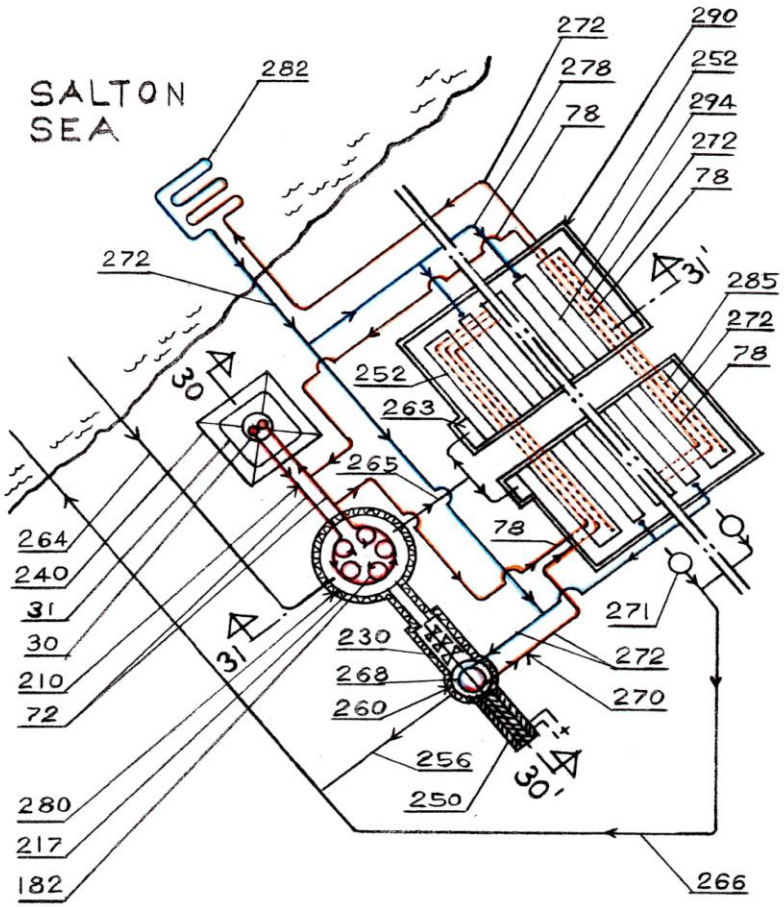

FIG. 29

- The power plant 280 for generation of electricity, consisting of: wellbore 30; first closed loop system 210; distiller 217; turbines 230; generator 250; and a condenser 260;
- Salty water from Salton Sea is injected into the boiler/evaporator 217 through a pipeline 264.
- Fresh water from the condenser 260 is, optionally, returned to the Salton Sea through line 256.
- Remaining salty water from distiller 217 is distributed through a pipeline 265 into desalinization processing building 290;
- Additional closed loop system 270 is used for cooling condenser 260, heating salty water and cooling condenser in building 290.
- Produced salt from removable pans 252 is periodically collected, loaded and transported.

Schematic cross-sectional view of a Power Plant taken along line 30-30' of FIG. 29.

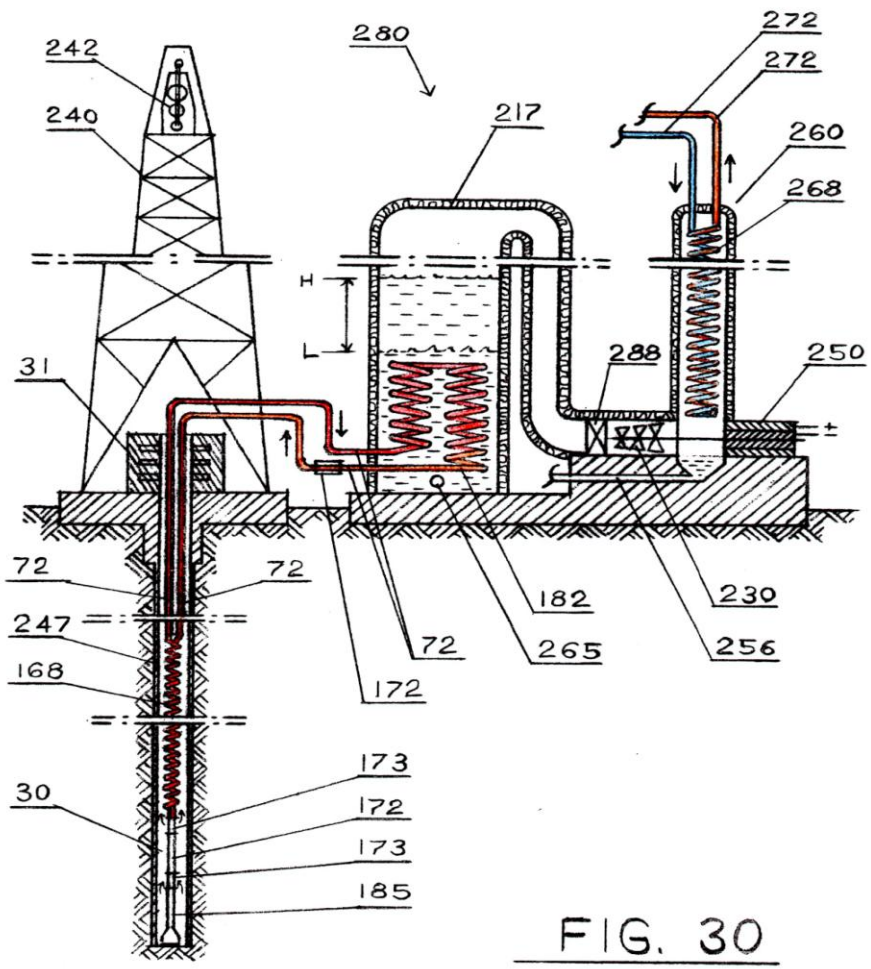

FIG. 30

- The first heat exchanger 168 of the closed loop system 210 is lowered at heat source and second heat exchanger 182 is coupled into boiler/evaporator 217.
- Salty water from Salton Sea is injected into boiler/evaporator 217 to the level "H".
- Salty water is heated by heat exchanger 182 and steam is produced which spins turbine 230, which drives generator 250, which generates electricity.
- The power unit 280 has a condenser 260 which is cooled with additional closed loop system 270.
- Remaining salty water, level "L", from distiller 217 is distributed through pipe line 275 into desalinization processing building 290;

Schematic cross-sectional view of a Power Plant taken along line 31-31' of FIG. 29.

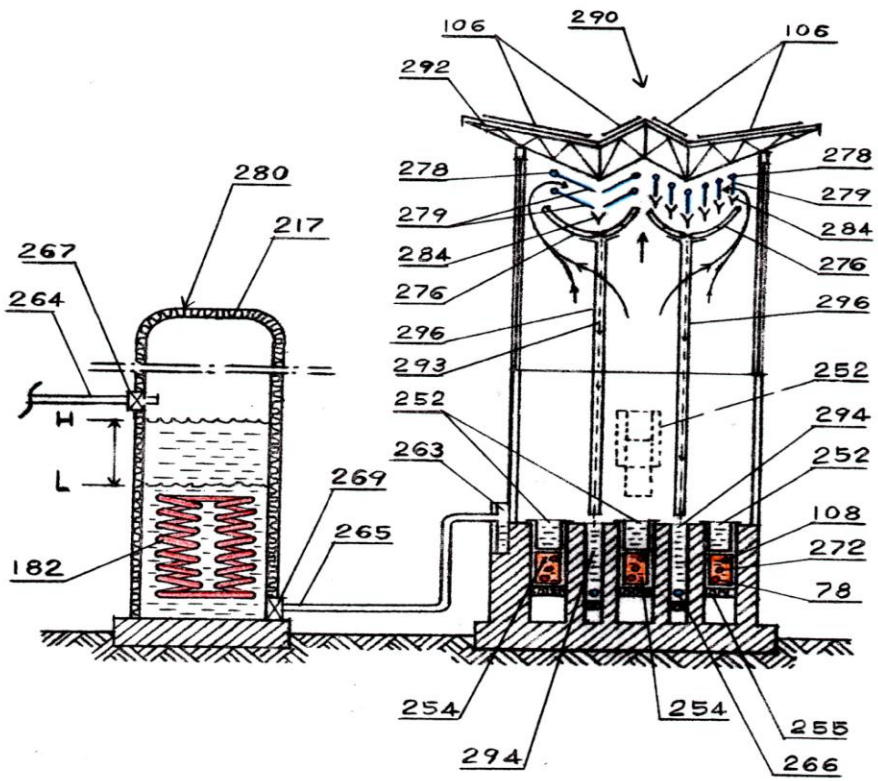

FIG. 31

- **Remaining, more concentrated, salty water, now level "L", from distiller 217 is distributed through pipe line 265 into removable pans 252 in the desalinization processing building 290;**
- **Salty water in removable pans 252 is heated by system of pipes from first closed loop system 210 and from cooling condenser 260.**
- **Evaporated moisture is condensed through system of condensers 279 at upper portion of the building and funneled through tubes 296 into fresh water channels 294.**
- **Produced salt from removable pans 252 is periodically collected, loaded and transported.**

Schematic cross-sectional view of an alternative heat exchange system used in desalinization plant shown in FIGS. 29-31

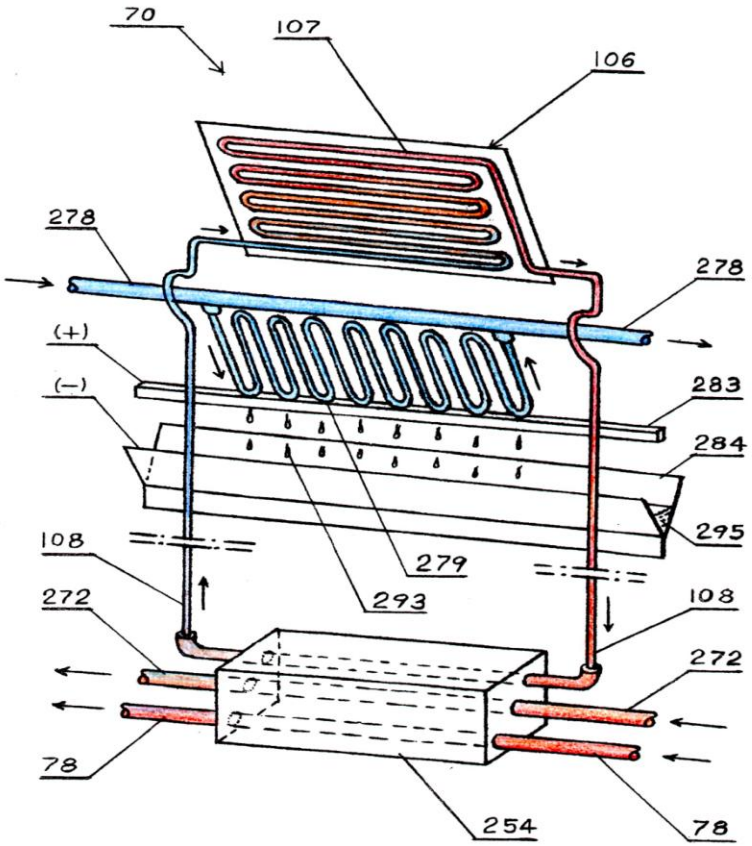

FIG. 32

- FIG. 32 illustrates a perspective cross sectional diagram of an alternative thermo-solar heat exchange system 70 to be used in desalinization plant shown in FIGS. 29-31.
- Here is illustrated, an optional solution, a thermo-solar panel 106 positioned on the roof of the desalinization processing building 290 to be used for heating heat exchange fluid in the containers 254 and indirectly heating salty water in pans 252 to induce evaporation.
- Evaporated moisture is condensed through system of condensers 279 at upper portion of the building and collected through pans 284.
- This system can function with geothermal support or independently.

Proposal for Restoration of the Salton Sean

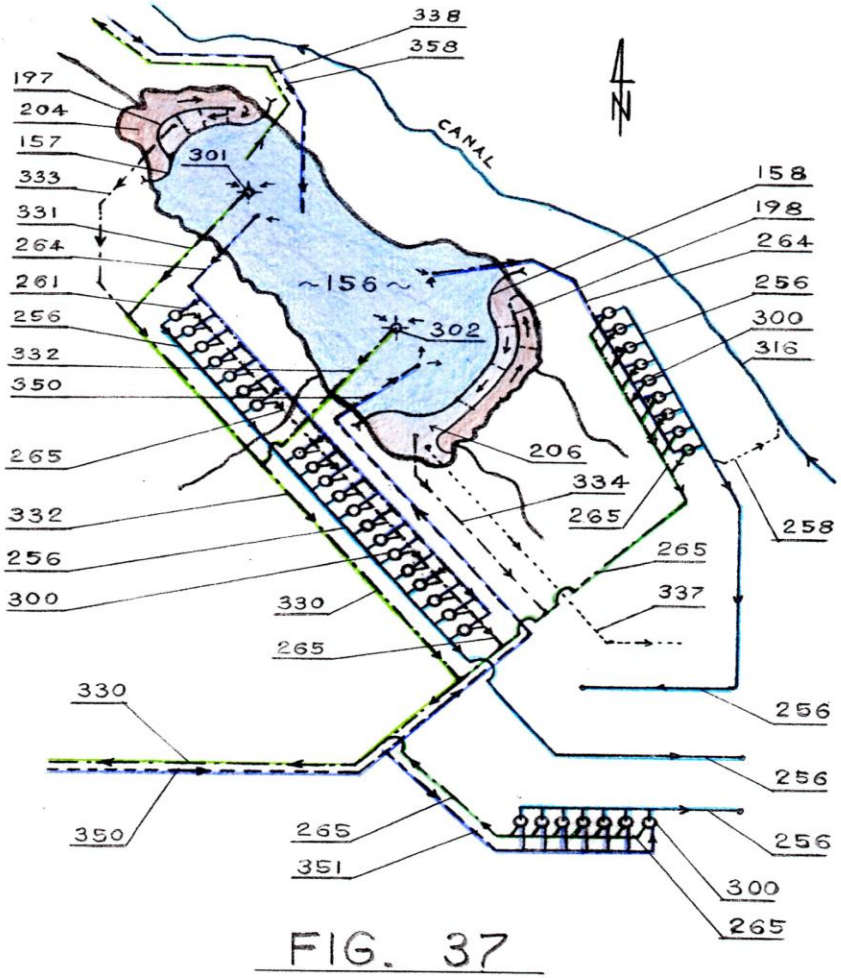

FIG. 37

- **156 – Salton Sea.**
- **157 & 158 – Dikes forming ponds**
  204 & 206 – for collecting and treating farmland runoff water and providing wildlife sanctuary.
- **330 – Outflow pipeline pumping out high salinity water from the Salton Sea and dispersing it into a vast ocean.**
- **350 – Inflow pipeline bringing water from the Pacific Ocean (San Diego area) to the Salton Sea.**
- **300 – Power Plants.**
- **256 – Fresh water line.**

Proposal for Restoration of the Salton Sean
- Alternative cooling System -

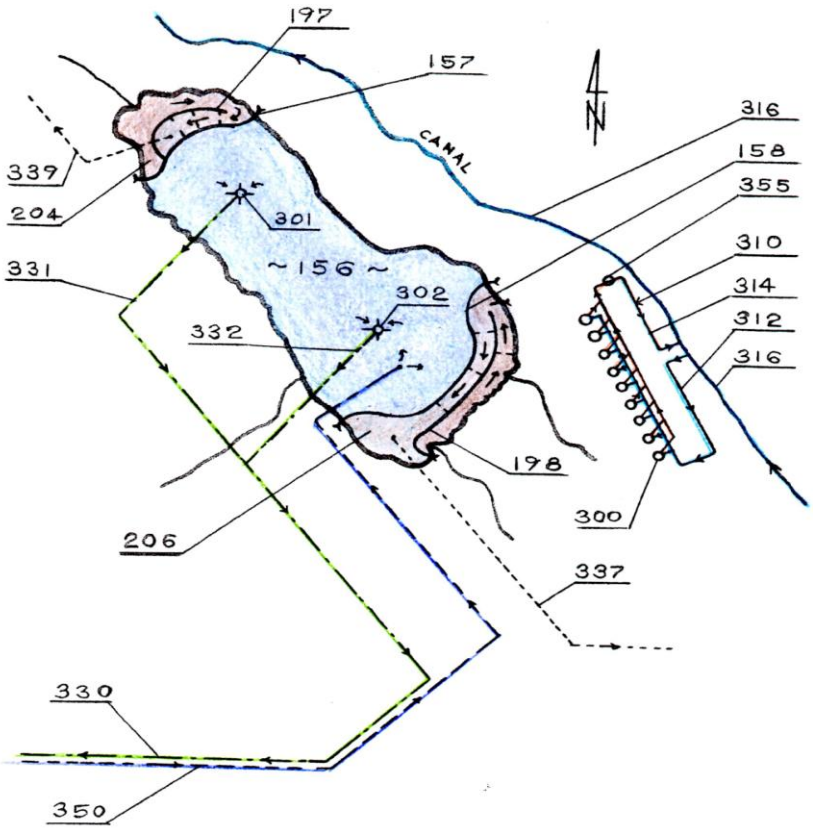

FIG. 38

- **156** – Salton Sea.
- **300 –** Power Plants.
- **316 –** Canal.
- **310 – Closed loop cooling system using water from canal.**
- **312 –** Inflow cooling line.
- **314 –** Outflow cooling line.

Proposal for Restoration of the Salton Sean Power Plants Southeastern Sector

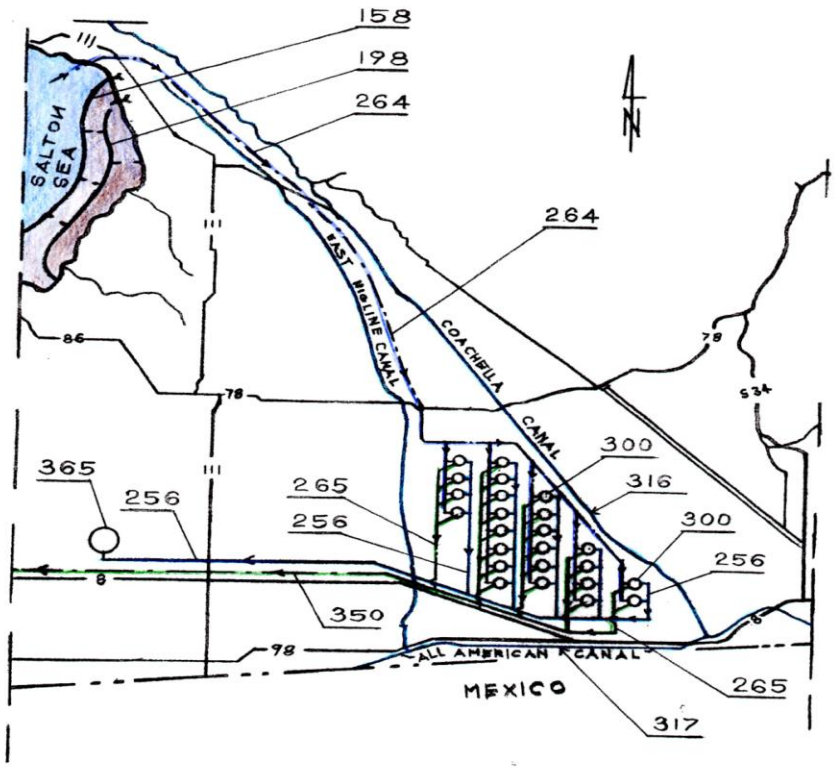

FIG. 39

- **156 – Salton Sea**
- **158 & 198 – Dikes forming ponds for collecting and treating farmland runoff water and providing wildlife sanctuary.**
- **264 – Oceanic water from the lake.**
- **300 – Power Plants Southeast Sector.**
- **265 – High salinity line.**
- **256 – Fresh water line.**

Proposal for Restoration of the Salton Sean
Power Plants Southeastern Sector - Alternative cooling System

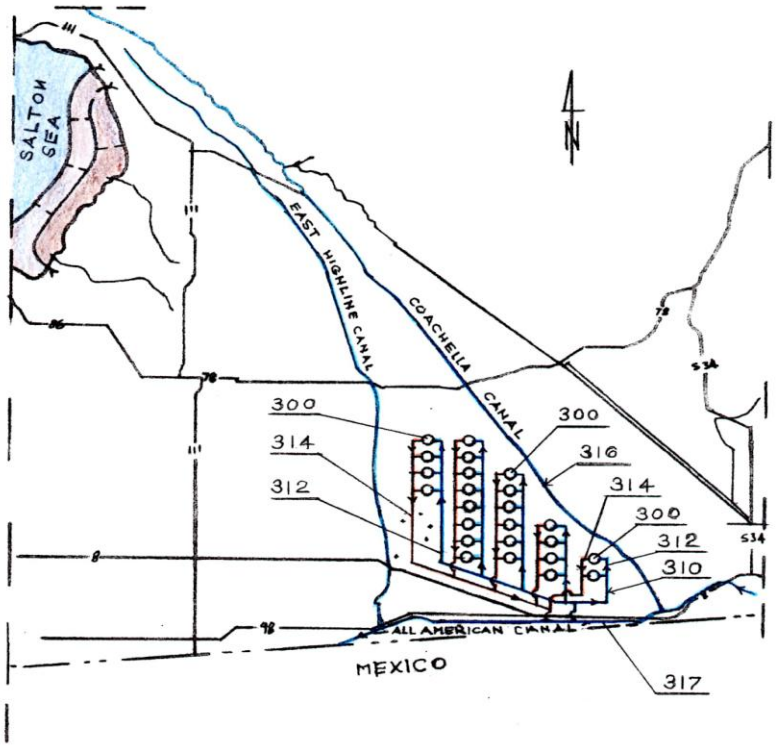

FIG. 40

- **156** – Salton Sea.
- **300** – Power Plants.
- **317** – Canal.
- **310** – **Closed loop cooling system using water from canal.**
- **312** – Inflow cooling line.
- **314** – Outflow cooling line.

GEOTHERMAL WORLDWIDE, INC.

Power Plant

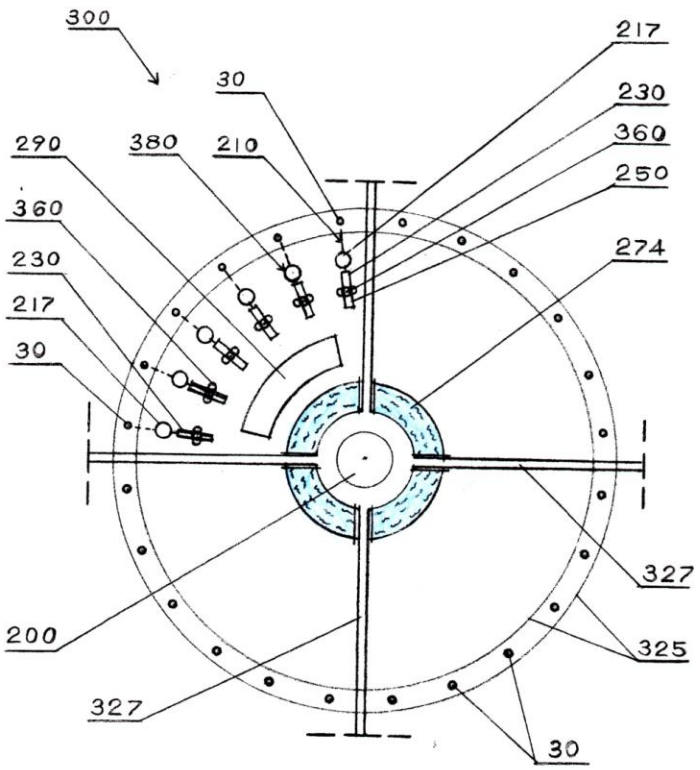

FIG. 41

- 300 – Power Plant.
- 30 – Wells.
- 380 – Power Units.
- 200 – Control Center.
- 290 – Processing Building.
- 274 – Fresh water pond.
- 210 – Heat Exchange system.
- 325 – Railroad track for maintenance derrick.

Power Plant – Enlarged One Section

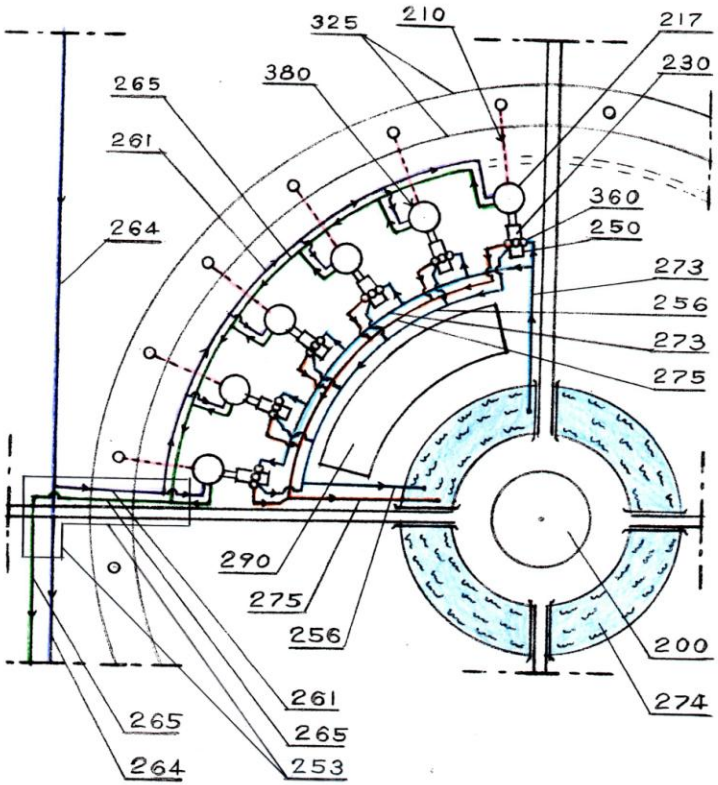

FIG. 42

- 30 – Wells.
- 380 – Power Units.
- 200 – Control Center.
- 290 – Processing Building.
- 274 – Fresh water pond.
- 210 – Heat Exchange system.
- 264 & 261 – Feeding lines from Salton Sea to the boiler 217.
- 273 – Inflow cooling line.
- 275 – Outflow cooling line.
- 256 – Condensed fresh water line.

Power Plant – Enlarged One Section - Alternative

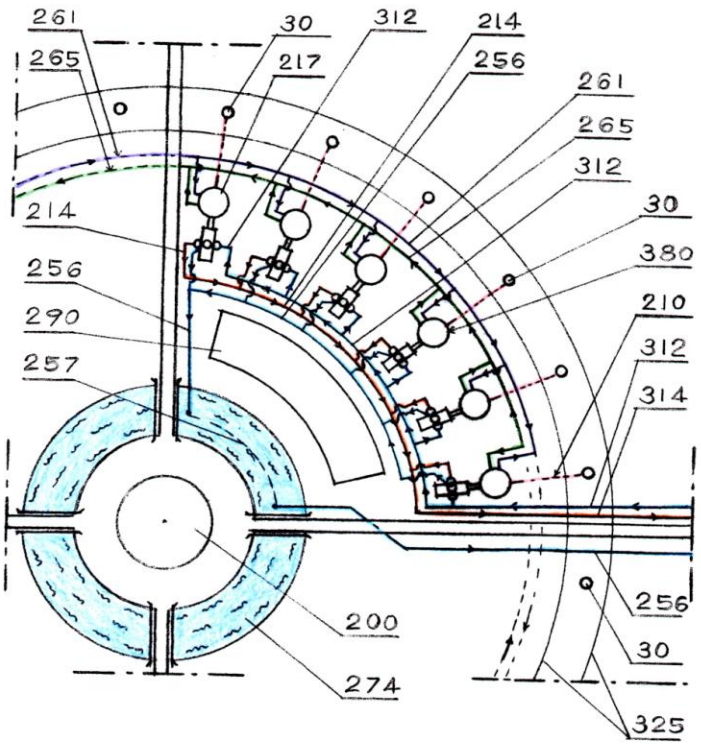

FIG. 44

- 30 – Wells.
- 380 – Power Units.
- 200 – Control Center.
- 290 – Processing Building.
- 274 – Fresh water pond.
- 210 – Heat Exchange system.
- 261 – Feeding line from Salton Sea to the boiler 217.
- 312 – Inflow cooling line - water from canal.
- 314 – Outflow cooling line.
- 256 – Condensed fresh water line.

Cross-Sectional view of one Power Unit – SCI-GHE System

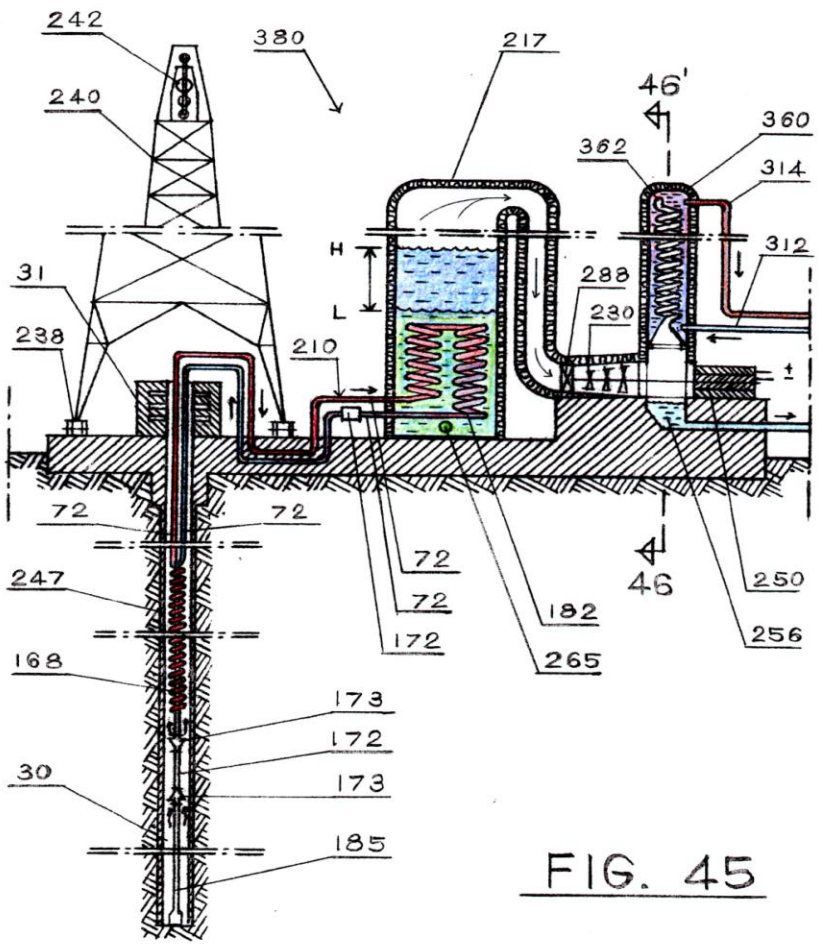

FIG. 45

- 30 - Well.
- 240 - Derrick.
- 380 - Power Units.
- 210 - Heat Exchange system.
- 217 - Boiler / Distiller.
- 230 - Turbine.
- 360 - Condenser.
- 250 - Generator.
- 312 - Inflow cooling line – water from canal.
- 314 - Outflow cooling line.
- 256 - Condensed fresh water line.

Cross-Sectional view of three Condensers of Power Unit

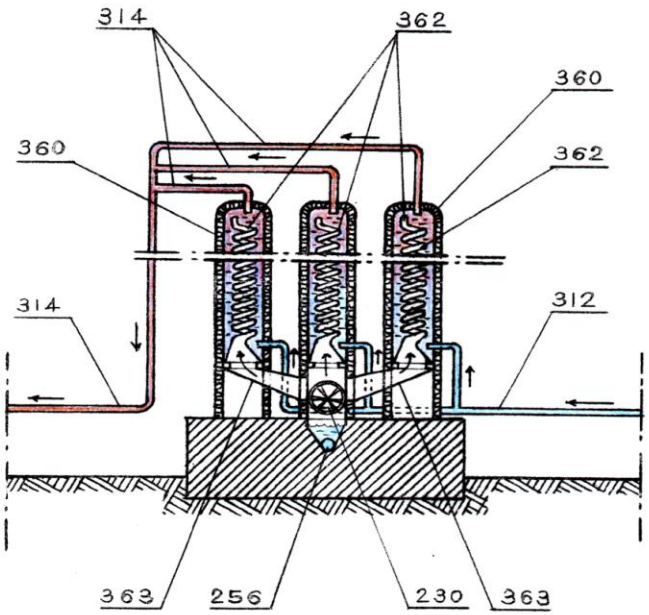

FIG. 46

- **360 - Condenser.**
- **362 - Inner Pipes.**
- **230 - Turbine.**
- **312 - Inflow cooling line.**
- **314 - Outflow cooling line.**
- **256 - Condensed fresh water line.**

Schematic Plan view of Power Unit with alternative two secondary binary Power Units

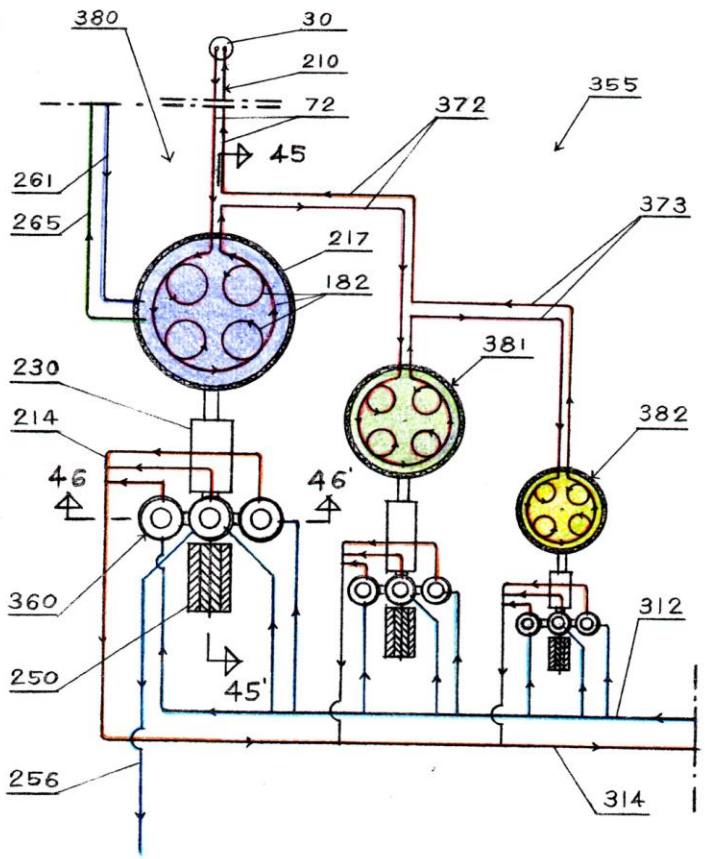

FIG. 47

- **30** - Well.
- **380** - Power Units.
- **210** - Heat Exchange system.
- **217** - Boiler / Distiller.
- **230** - Turbine.
- **360** - Condenser.
- **250** - Generator.
- **312** - Inflow cooling line.
- **314** - Outflow cooling line.
- **256** - Condensed fresh water line.
- **381 & 382 - Binary Power Units.**

Schematic Plan view of an alternative Power Unit modified for generation of electricity, fresh water and extraction of minerals

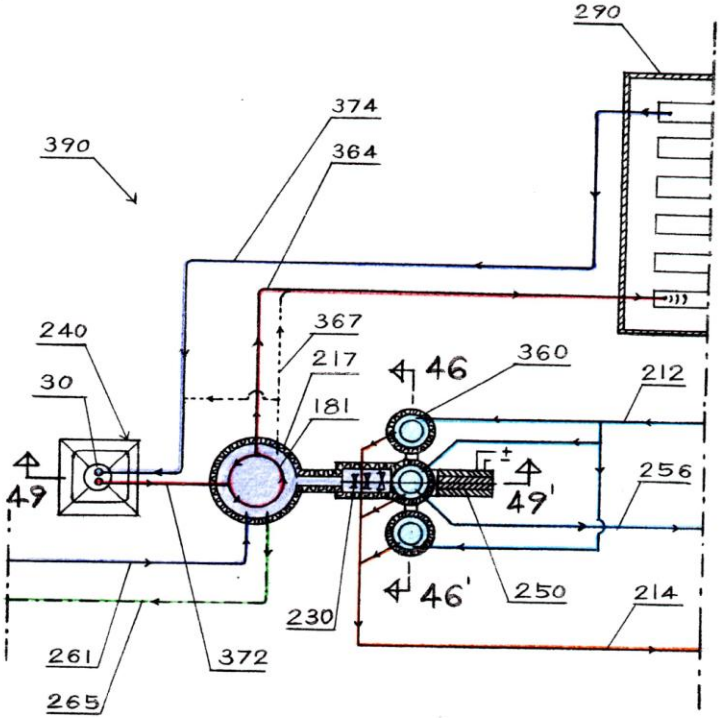

FIG. 48

- **30** - Well.
- **390** - Power Units.
- **217** - Boiler / Distiller.
- **230** - Turbine.
- **360** - Condenser.
- **250** - Generator.
- **312** - Inflow Cooling Line.
- **314** - Outflow Cooling Line.
- **256** - Condensed Fresh Water Line.
- **372** - **Brine Excavation Line.**
- **364** - **Brine Line to Processing Building**
- **374** - **Return Brine Line to Well.**
- **290** - **Processing Building.**

GEOTHERMAL WORLDWIDE, INC.

Cross-Sectional view of Power Unit modified for production of electricity, fresh water and extraction of minerals

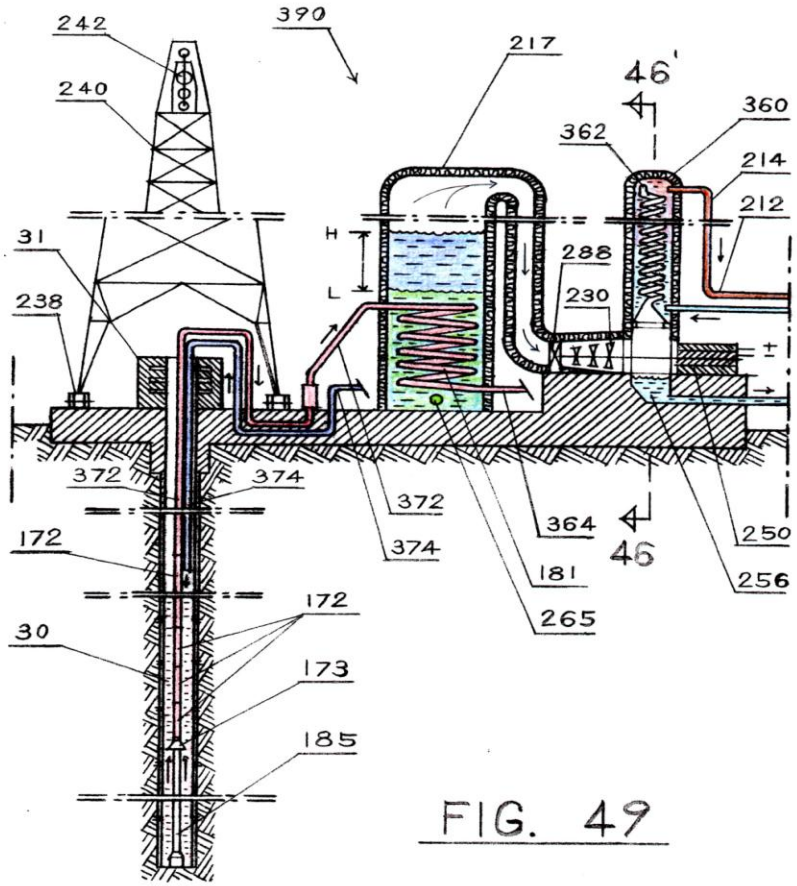

FIG. 49

- **30** - Well.
- **390** - Power Units.
- **217** - Boiler / Distiller.
- **230** - Turbine.
- **360** - Condenser.
- **250** - Generator.
- **312** - Inflow Cooling Line.
- **314** - Outflow Cooling Line.
- **256** - Condensed Fresh Water Line.
- **372 - Brine Excavation Line.**
- **364 - Brine Line to Processing Building**
- **374 - Return Brine Line to Well.**

Advantages of the "Scientific Geothermal Technology“ the (SCI-GGG) & (SCI-GHE) systems:

1. **Generates electricity constantly 24 hours per** day regardless of weather condition on the ground surface.

2. **Needs a single well** bore to function and doesn’t need a hydrothermal reservoir although it is not limited to dry hot rocks.

3. **The (SCI-GHE) and/or (SCI-GHE) apparatus** can be **scaled** to be used for **extracting heat from abandon** and marginal **wells.**

4. Uses **several closed loop systems** and at no time is there any contact with the environment by the working fluid or the heat exchange fluid therefore it **doesn’t pollute the environment.**

5. **Eliminates** any concern of **”fracking”** (Hydraulic Fracturing).

6. **Eliminates** the issues of injection water.

7. **Eliminates** the issues of concentration of brine, **filtration, separation,** equipment **corrosion, scaling,** and ground **water pollution.**

Advantages of the "Scientific Geothermal Technology“ the (SCI-GGG) & (SCI-GHE) systems:

8. **Modular implementation** of the **"Scientific Geothermal Technology"** systems create immediate revenues and allowed continuation of buildups of additional modular units.

9. When eventually cooling of the rocks happen then **additional drilling** could be performed, **periodically** or **at once,** until **equilibrium** of heat absorption and heat replenishment is **achieved** rather than start drilling at a new location nearby. The **extended depth** will result **in hotter rock** formations and **higher heat flux.** Eventually, a point will be reached where heat extraction and heat replenishment will be in **balance - equilibrium.**

10. Necessary heat can be reached and used from any location and **every country has the potential** to access that limitless heat source and **produce electricity** by implementing the "Scientific Geothermal Technology" systems.

11. By implementing **"Scientific Geothermal Technology “** systems, we can **stop polluting** our planet with nuclear, coal and oil burning power plants and their toxic waste **and start producing electricity** from abundant **self sustaining geothermal source** for energy needs for our **current** and **future generations.**

MISSION STATEMENT:

Our corporate mission at Geothermal Worldwide, Inc., include the following:

- **Licensing our unique "Scientific Geothermal Technology“:**
  1. "Self Contained In-Ground Geothermal Generator" **(SCI –GGG)** system;
  2. "Self Contained In-Ground Heat Exchanger" **(SCI –GHE)** systems;
  3. **"In-Line Pump",** and more, to interested and capable parties worldwide;

  and

- **Promoting** implementation of our methods commonly called the **"Scientific Geothermal Technology"** for generating electricity by efficiently harnessing the limitless source of geothermal energy without polluting the environment and in the process start preserving our environment from further degradation;

RELEVANT QUOTES

- **"We cannot solve our problems with the same thinking we used when we created them".**

  ~ Albert Einstein (1879-1955) ~

****

- **"All truth passes through three stages:**
- **First, it is ridiculed;**
- **Second, it is violently opposed; and**
- **Third, it is accepted as self-evident".**
  - *~ Arthur Schopenhauer (1788-1860) ~*