PROPOSAL for RESTORATION of the SALTON SEA
"Scientific Geothermal Technology"

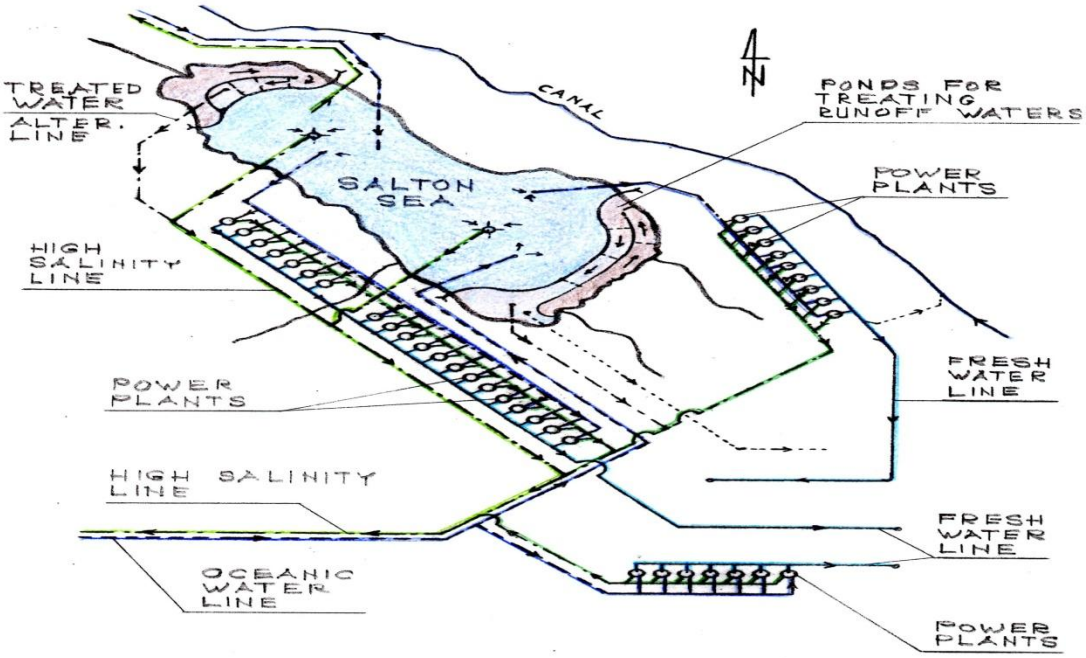

Proposer:

Nikola N. LAKIC, Architect,
Founder & CEO of Geothermal Worldwide, Inc.
78-365 Hwy 111, #402,
La Quinta, CA 92253,
USA
01-760-347-1609
01-760-333-3851 cell
www.GeothermalWorldwide.com
nlakic@Geothermalworldwide.com

INDEX

PROPOSAL: ……..… 2-32
ABSTRACT: ……. 2-4
APPENDIX: ……..... 33-61
BACKGROUND AND ADDITIONAL INFORMATION: …….. 62-64

SUBMITTAL REQUIREMENTS FOR SUBMITTING UNSOLICITED PROPOSALS TO RESTORE THE SALTON SEA

PROPOSALS MUST INCLUDE THE FOLLOWING ELEMENTS:

Please provide as much detail as possible, including specifications, designs, schematics, and/or maps.

1. Proposal Synopsis

Briefly describe your proposed technology or process and the problem(s) it solves. Provide contact information and a brief discussion of your firm's qualifications (detailed qualification information is unnecessary, but can be included in an appendix).

Keyword List: Desalinization, Tourism, Fresh Water, Geothermal Energy, Electricity Production, Geothermal, Energy, Electricity Generation, Renewable Energy, Environment, Generator, Heat Exchanger, Waste Heat, Oil and Gas Recovery, Condenser, Self Contained In-Ground Geothermal Generator**,** Self Contained In-Ground Heat Exchanger, Cross Country Pipeline, In-Line Pump.

References: U.S. Patent No. 7,849,690; entitled: "Self Contained In-Ground Geothermal Generators" (SCI-GGG); Issued on: Dec.14, 2010; U.S. Patent No. 8,281,591; entitled: "Self Contained In-Ground Geothermal Generators" (SCI-GGG); Issued on: October 9, 2012; U.S. Patent No. 8,713,940; entitled: "Self Contained In-Ground Geothermal Generators" (SCI-GGG); Issued on: May 6, 2014; and several patent pending applications. Geothermal Resource Council (GRC) - Transactions 2012, Volume 36 - Poster Presentation.

ABSTRACT:

Included is an exemplary method for restoration of the Salton Sea, which implements the "Scientific Geothermal Technology" for exchanging water from a salty terminal lake with oceanic water and treating farmland runoff waters. The "Self Contained In-Ground Heat Exchanger" (SCI-GHE) system uses heat from the Salton Sea Geothermal Field (SSGF) for generation of electricity and production of fresh water. This method is self sustained, environmentally friendly and has great commercial potential.

The objectives of the enclosed proposal for restoration of the Salton Sea are:

1. Raising and stabilizing the lake's waterline level;

2. Preventing further pollution of the lake and treating farmland runoff waters and providing wildlife sanctuary;

3. The equalizing salinity of the salty terminal lake (Salton Sea) water with salinity of the Oceanic water and subsequently providing conditions for tourism; and making Salton Sea a renewed recreational destination; and

4. Harnessing prevalent geothermal source of the Salton Sea Geothermal Field (SSGF) for generation of electricity and production of fresh water - both having commercial value.

The proposal for restoration of the Salton Sea consists of five Phases:

Phase I - Connecting the Salton Sea with the Ocean (San Diego, Oceanside area) with several pipelines (inflows and outflows);

Phase II - Building two main dikes - One in northern and one in southern part of the Salton Sea.

Phase III - Building one power plant using (SCI-GHE) system at one of selected sector;

Phase IV - Building several more power plants using (SCI-GHE) system - one in each selected sector; and

Phase V - Continued buildup of additional power plants using (SCI-GHE) system at each selected sector;

About Technology:

The proposal for restoration of the Salton Sea implements the Scientific Geothermal Technology modified so to include local conditions. The Scientific Geothermal Technology (The Self Contained In-Ground Geothermal Generator; The Self Contained Heat Exchanger; and The IN-LINE PUMP) consist of several designs and variations complementing each other and/or operating separately in many different energy sector applications. The In-Line Pump should be used for two way pipelines connecting the Salton Sea with Pacific coast because this system requires the least energy for operation.

As a first option for electricity generating unit, to be implemented, for this proposal is the "Self Contained In-Ground Heat Exchanger" (SCI-GHE) system. It has less production capacity than the Self Contained In-Ground Geothermal Generator (SCI-GGG) system, but is less expensive to produce and to implement. Later on when the (SCI-GHE) system starts generating revenue it can be replaced with (SCI-GGG) system which at this stage requires more investment and time for full development.

In summary: The function of the "Self Contained In-Ground Heat Exchanger" (SCI-GHE) system consists of several stages:

1. Extracting heat from prevalent geothermal sources;

2. Transferring heat up to the ground surface through completely closed loop system (no need for geothermal fluid to be pumped to the surface as is the case with conventional geothermal systems);

3. Using extracted heat from geothermal sources for generation of electricity for commercial and residential use; and

4. Producing fresh water as a byproduct without spending additional energy for its production.

We all know that there is an enormous source of energy under our feet whether it is a few miles underground or on the surface in locations such as Hawaii. The question was, until now, how to harness it expediently and efficiently?

2. Problem Definition

Many proposals that we receive suggest that a particular technology or process will "fix" the Sea. Oftentimes the same proposals do not define what problem or issue is being fixed. The guidelines referenced reports describe various physical qualities of the Sea and we suggest referring to these reports in your problem definition.

The Salton Sea is California's largest lake and is presently about 50 percent saltier than the ocean. The Salton Sea is a "terminal lake," meaning that it has no outlets. Water flows into it from several limited sources, but the only way water leaves the sea is by evaporation. The lake is currently 35 miles long, 10 miles wide, and is located south of Palm Springs in a basin 230 feet below sea level. The Salton Sea Geothermal Field (SSGF) has a high salinity and the core temperature is high. The earth's crust at the south end of the Salton Sea is relatively thin. Temperatures in the Salton Sea Geothermal Field can reach 680 ^{o}F less than a mile below the surface. There are already several conventional geothermal power plants in the area.

Runoff water from nearby farmland which contains fertilizers, pesticides and other pollutants from Mexicali, Mexico, contaminate Salton Sea and make it an undesirable tourist destination especially for beach goers.

The runoff water has been decreasing and is set to decline dramatically after 2017, when more water will be transferred from the canal (Colorado River) to San Diego County and the Coachella Valley under a water transfer deal known as Quantification Settlement Agreement, or QSA, which would speed up the disappearance of the Salton Sea.

As the lake level drops, exposing the lake bed and precipitating higher salinity levels, increasing amounts of dust will blow from exposed shorelines. That dust could pose serious health threats in an area with high rates of asthma and other respiratory illnesses as well as a serious threat to its multi-billion-dollar tourist trade.

In a recent report, the Oakland-based Pacific Institute projected that without action to address the Salton Sea's deterioration, the long-term social and economic costs — in higher health care costs and lower property values, among other costs — could range between $29 billion and $70 billion over the next 30 years.

3. Design

Please address the following questions:

- *How would the technology/process be applied at the Salton Sea?*

The objectives of the enclosed concept for restoration of the Salton Sea are:

1. Raising and stabilizing the lake's waterline level by connecting the Salton Sea with Pacific coast (Phase I);

2. Preventing further pollution of the lake by building two main dikes forming a central mass of water and two peripheral reservoirs for containing and treating farmland runoff waters and providing wildlife sanctuary (Phase II);

3. the equalizing salinity of the salty terminal lake (Salton Sea) water with salinity of the Oceanic water and subsequently providing conditions for tourism and making Salton Sea a renewed recreational destination (Phase I & II); and

4. Harnessing prevalent geothermal source of the Salton Sea Geothermal Field (SSGF) for generation of electricity and production of fresh water – both having commercial value (Phase III, IV & V).

Phase I:

Phase I consists of building an ocean pipeline system connecting the Salton Sea with Pacific coast - San Diego or Oceanside area. The pipeline may have preferably 8 pipelines (4 inflow and 4 outflow) following FWY 8 or FWY 10 to Beaumont, then 79, Temecula, etc. or around the mountains through Riverside or any other preferred corridor. Having Phase I finished we would be able to pump out high salinity water from the bottom of the Salton Sea, where high salinity water because of higher density is accumulated, and inject it into the Pacific Ocean and bring ocean water into the Salton Sea. By connecting the Salton Sea with the Ocean we would be able to control the level of the Salton Sea and equalize (reduce) salinity of the Salton Sea with the salinity of the Ocean. Why San Diego area and not the Sea of Cortez?
The Sea of Cortez has in general stationary water and we may end up exchanging the same fluid. Pacific coast has strong current and high salinity water from the Salton Sea will disperse into the vast Ocean without negative effect on marine life. Also, this way we will eliminate "other country issue". Alternatively, the ocean pipeline system may comprise at least three ocean pipelines fluidly connecting an ocean with a central mass of water in a salty terminal lake, such as the Salton Sea. Two of the at least three ocean pipelines may provide inflow into the salty terminal lake and one pipeline may provides outflow from the salty terminal lake for controlling the lake water level.

Phase II:

Phase II prevents further pollution of the Salton Sea and providing sanctuary for wildlife. Phase II consists of building two main dikes forming a central mass of water and two peripheral reservoirs - one in northern and one in southern part of the Salton Sea – for containing and treating runoff water from nearby farmland before pumping it back and reusing it for farmland. An example for the treatment of wastewater can be the Arcata Wastewater Treatment Plant and Wildlife Sanctuary. It is an innovative sewer management system employed by the city of Arcata,

California. A series of oxidation ponds, treatment wetlands and enhancement marshes are used to filter sewage waste. Alternatively, water from reservoirs can be pumped into "outflow" pipeline(s) for dispersing it into vast Pacific Ocean or can be injected into wells for forming or maintaining geothermal reservoirs for better heat transfer to the heat exchange system.

Benefits of Phase I & II:

1. By saving and restoring the Salton Sea we will continue having a substantial water surface in our proximity which has a positive effect on our local climate.

2. After several years the Salton Sea will contain mostly oceanic water. By controlling inflow and outflow at the Salton Sea we can produce a surplus of (now) oceanic water to be used for feeding geothermal power plants for generation of electricity and production of fresh water.

3. As a renewed recreational destination the Salton Sea area will flourish with tourism. Beaches can operate all year around. It would provide a base for building memorable restaurants, resorts and waterfront communities.

4. The wildlife sanctuary will thrive and ecosystem will benefit.

Consequences if we don't restore the Salton Sea:

1. If we do not restore and save the Salton Sea it will dry out with the exception of one or two relatively small ponds which will have extremely high salt concentration and will be toxic. A huge lake bed will be exposed and we would encounter negative effects such as dust storms and health issues associated with it such as asthma and other respiratory diseases;

2. Already established wildlife will gradually disappear;

3. Real estate value depreciation in nearby areas and subsequently reduction in businesses and population will occur. In a recent report, the Oakland-based Pacific Institute projected that without action to address the Salton Sea's deterioration, the long-term social and economic costs — in higher health care costs and lower property values, among other costs — could range between $29 billion and $70 billion over the next 30 years.

Cost estimate for Phase I & II

Although I do not have an exact cost estimate at this time it is important to understand the importance of implementation of this proposal for restoration of the Salton Sea and the ratio of its cost and benefits. Whatever initial cost to build the Phase I & II is going to be - $2 billion, $3 billion or even $4 billion - it is imperative that we do it because it is the foundation for subsequent phases which have great potential for generating revenue in hundreds billion of dollars, economic development and clean environment. The In-Line Pump (illustrated in FIGS. 22 & 23) should be used for two way pipelines connecting the Salton Sea with Pacific coast because this system requires the least energy for operation. Each In-Line Pump is an efficient pumping device and would reduce the final cost of the project. It functions as a generator at downhill flow routes – it generates electricity, which can be added as a supplement to energy needed for uphill and horizontal flow routes. We should have at least 3 bidders (contractors) and select one with most affordable price and best credentials. The Salton Sea Authority should inform local politicians about this proposal and should initiate an aggressive effort on state and

federal level asking for a grant or long term loan for implementation of the Phase I & II. As is the case with any new technology, it is difficult to predict the exact costs for development and implementation of the "Scientific Geothermal Technology" but because of the unique location, having a source of heat - mantle plume under the Salton Sea Geothermal Field (SSGF) - and the simplicity of the system, the revenue generated from harnessing geothermal energy is expected to be in the hundred billions of dollars in several decades and will continue generating such revenue in the future. Therefore, whether initial expenses of the project are $9 billion or $17 billion is less relevant in comparison to long term benefits gained for economy and environment.

Another strong point of proving irrelevancy of the initial cost of the project is that in a recent report, the Oakland-based Pacific Institute projected that without action to address the Salton Sea's deterioration, the long-term social and economic costs — in higher health care costs and lower property values, among other costs — could range between $29 billion and $70 billion over the next 30 years.

The ratio of cost and benefits of this proposal for restoration of the Salton Sea can be compared to the ratio of cost and benefits of the Hoover Dam.

How to pay for Phase I & II?

A substantial portion of the cost for the Phases I & II could be paid in the future from portion of revenue generating from tourism. Also, a portion of the cost for the Phases I & II could be paid from the revenue generated from Geothermal Power Plants during and after building up of Phase V.

Phase III:

Phase III consists of building the first Power Plant at one selected sector, in accordance with the proposal, using Self Contained In-Ground Heat Exchanger (SCI-GHE) system modified so to use salty water from the lake to generate electricity and having byproduct fresh water. Portion of generating revenue from generated electricity and fresh water can be used for building subsequent power plants of (Phase IV). By having saved the Salton Sea (Phase I & II) we will have plenty of (now) oceanic water for operating many Power Plants in the surrounding area. Alternatively, for the first Power Plant (Phase III) we could use binary system to provide electricity during construction of the (Phase I) and further for pumping fluids through the pipeline system.

Phase IV:

By having saved the Salton Sea (Phases I & II) and finished building the first Power Plant (Phase III) using Self Contained In-Ground Heat Exchanger (SCI-GHE) system we can start building several additional power Plants – one on each selected sector in accordance with the proposal;

Phase V:

Phase V consists of continued buildup of additional Power Plants. By having saved the Salton Sea (Phase I & II) we will have plenty of ocean water for operating series of Power Plants using Self Contained In-Ground Heat Exchanger (SCI-GHE) system modified so to use salty water from the lake to generate electricity and produce fresh water. By using the Self Contained

In-Ground Heat Exchanger (SCI-GHE) system we are not limited to geothermal reservoirs. Because of the unique location, having mantle plume under the Salton Sea Geothermal Field (SSGF), the potential for the profit by harnessing geothermal energy is enormous. This phase (Phase V) can be built rapidly with additional investments or alternatively at a slower pace by investments from portion of revenue generated from preceding power plants.

The foregoing and other features and advantages of the present proposal will be apparent from the following more detailed description of the particular embodiments of the proposal, as illustrated in the accompanying drawings in an appendix.

BRIEF DESCRIPTION OF THE DRAWINGS

The Proposal for Restoration of the Salton Sea with Scientific Geothermal Technology will be described with reference to the figures of which:

FIG. 1 is a cross sectional view of a Self Contained In-Ground Geothermal Generator (SCI-GGG) with main segments;

FIG. 2 is a cross sectional view taken along line **1-1'** of FIG. **3** of a Self Contained In-Ground Geothermal Generator (SCI-GGG);

FIG. 3 is a cross sectional view of the condenser distributor along line **3-3'** of FIG. **2**;

FIG. 4 is a cross sectional view of the condenser distributor along line **4-4'** of FIG. **2**;

FIG. 12 is a schematic diagram of cross sectional view of the Self Contained In-Ground Geothermal Generator (SCI-GGG) with main segments including heat exchanger on the ground surface;

FIG. 13 is a schematic diagram of cross sectional view of an alternative independent heat exchange system, the Self Contained In-Ground Heat Exchanger (SCI-GGE) with main segment;

FIG. 22 is a cross sectional view taken along line 22-22' of FIG. **23** of an In-Line Pump;

FIG. 23 is a cross sectional view taken along line 23-23' of FIG. **22** of an In-Line Pump;

FIG. 24 illustrates a schematic cross sectional diagram of a universal heat exchange system in accordance with the proposal;

FIG. 26 illustrates a schematic diagram of the heat exchange system shown in FIG. 24 to be used for production of electricity in a location where lava is accessible in accordance with the invention;

FIG. 27 illustrate a schematic cross sectional diagram of the heat exchange system shown in FIG. 24 to be used for production of electricity from heat source such as oil well flare stacks in accordance with the invention;

FIG. 29 is a plain view of the heat exchange system shown in FIG. **24** to be used, as an alternative option, for production of electricity, fresh water and salt in accordance with the

proposal;

FIG. 30 is an cross sectional view taken along line **30-30'** of FIG. **29,** in accordance with the proposal;

FIG. 31 is an cross sectional view taken along line **31-31'** of FIG. **29,** in accordance with the proposal;

FIG. 32 illustrates a perspective cross sectional diagram of an alternative heat exchange system to be used in desalinization plan shown in FIGS. 29-31;

FIG. 37 is a plain view of a large salty body of water and schematic diagram of pipeline systems associated with restoration of the Salton Sea;

FIG. 38 is a plain view of a large salty body of water and schematic diagram of pipeline systems for exchanging that water with oceanic water and one section of geothermal power plants with an alternative cooling system;

FIG. 39 is a plain view of a large salty body of water and schematic diagram of pipeline systems associated with an alternative section of geothermal power plants;

FIG. 40 is a plain view of a large salty body of water and schematic diagram of pipeline systems with an alternative section of geothermal power plants shown in FIG. 39 with an alternative cooling system;

FIG. 41 is a plain view of a schematic diagram of the geothermal power plant with array of 24 wells.

FIG. 42 is enlarged schematic diagram of the one section of the geothermal power plant shown in FIG.41 with a cooling system;

FIG. 43 is enlarged schematic diagram of the one section of the geothermal power plant shown in FIG.41 with an alternative cooling system;

FIG. 44 is enlarged schematic diagram of the one section of the geothermal power plant shown in FIG.41 with an alternative cooling system;

FIG. 45 is an cross sectional view of one power unit taken along line **45-45'** of FIG. 47;

FIG. 46 is an cross sectional view taken along line **46-46'** of FIGS. 45, 47, and 48;

FIG. 47 is schematic diagram of a geothermal power unite of the power plant illustrated in FIG.45 with an alternative secondary power unit aside;

FIG. 48 is schematic diagram of an alternative power unite of a geothermal power plant modified for production of electricity, fresh water and extraction of minerals;

FIG. 49 is a cross sectional view of an alternative power unit taken along line **49'-49'** of FIG. 48.

DETAILED DESCRIPTION OF THE TECHNOLOGY AND THE PROPOSAL FOR RESTORATION OF THE SALTON SEA

FIGS. 1- 4 and **12** illustrate cross-sectional views of the Self Contained In-Ground Geothermal Generator (SCI-GGG) with main segments. The SCI-GGG system uses several completely closed loop systems and generates electricity down at the heat source and transmits it up to the ground level by means of electrical cables. The SCI-GGG apparatus consist of a boiler **120**, a turbine **130**, a converter **140**, a generator **150**, a condenser distributor **160** and condenser **68**. The boiler is exposed to the source of heat. The engine compartment is thermally insulated and cooled with a second closed loop system which is engaged with a third closed loop system at ground level and generates additional electricity.

By lowering the SCI-GGG apparatus in a predrilled well bore to the hot substrate of the Earth's crust, electricity is generated below the ground and transmitted up to the surface by cable and subsequently through existing electrical grids to residences and industry.

FIG. 13 is a schematic diagram of cross sectional view of an alternative, independent heat exchange system, the Self Contained In-Ground Heat Exchanger (SCI-GGE) with main segments, including a close loop line **72**, the first heat exchanger deep in the ground **168** and the second one **182** on the ground surface. The SCI-GHE system is an integral part of the SCI-GGG system and can be used separately as an independent heat exchange apparatus. The SCI-GHE apparatus consists of: two coils (heat exchangers) **168** and **182**; a closed loop thermally insulated line **72**; at least one in-line pump **172**; and a "binary power unit" **184**.

By lowering a first coiled pipe (heat exchanger) **168** in a predrilled well bore to the source of heat (hot rocks or hydrothermal reservoir) heat is absorbed and transported by circulating fluid through a thermally insulated closed loop line **72** to the second coiled pipe (heat exchanger) **182** which is connected with a second closed loop system (binary power unit) at ground level **184** which generates electricity by using Organic Rankine Cycle (ORC) which is then transported through the electricity grid to residences and industry.

The slide illustrating **FIG 12** and **FIG 13** side by side explains and compares SCI-GGG and SCI-GHE systems. The (SCI-GHE) system is an integral part of the SCI-GGG system and has less production capacity than the (SCI-GGG) system but it is easier to build and maintain. The Scientific Geothermal Technology doesn't require hydrothermal reservoirs and is not limited to dry hot rocks.

FIGS. 22 and **23** illustrate an In-Line Pump **172** which is an integral part of the SCI-GGG & SCI-GHE systems designed for circulating fluids through a closed loop systems, and can also be used effectively in many applications wherever substantial pumping force is needed. For example, the In-Line Pump **172** as a repetitive segment can be used for pumping up oil from oil wells (reservoirs) in which geo-pressure is low, or any other type of fluid from a reservoir, such as, but not limited to, water or natural gas. The In-Line Pump **172** is an electric motor of cylindrical shape and can be inserted as a repetitive segment in the pipeline and has no length limitation; therefore it increases power to the electro-motor which imparts pumping to circulate fluid at desired speed. The In-Line Pump **172** is an electric motor **91** consisting of a rotor **102** and a stator **104**. Stator **104** and rotor **102** are engaged through two sets of ball bearings **97** and an additional set of sealant bearings **98**. The hollow shaft **50** has continuous spiral blades **51** formed on the inner side of the hollow shaft **50**. When the electro motor **91** is activated the hollow shaft **50** which is a central element of the rotor **102** rotates with the continuous spiral blade **51** which is

coupled within the hollow central shaft **50** of the rotor **102** creating a force to move fluid through the closed loop line **72**. For example the In-Line Pump **172** can be used in cross country pipeline for oil, gas, water, etc., as a repetitive segment. In downhill route it can function as a generator and generates electricity which can be used to supplement the In-Line Pump in horizontal and uphill route.

FIG. 24 illustrates a schematic cross sectional diagram of a universal heat exchange system **210,** also shown in FIG. **13**, with main segments, including: a thermally insulated close loop line **72** with an In-Line Pump **172**; first heat exchanger **168** positioned in a heat source environment "A"; and the second heat exchanger **182** positioned in a preferred environment "B". By circulating heat exchanging fluid through closed loop system heat is extracted from a heat source through the first heat exchanger **168** and transferred through thermally insulated line **72** to the second heat exchanger **182** for external use including production of electricity. The heat exchange system **210** is portable and can be used in many different applications.

FIGS. 26 & 27 illustrate, for better understanding, a function of the universal heat exchange system **210,** shown in FIG. **24**, implemented in two different applications.

FIG. 26 illustrates a schematic diagram of the heat exchange system shown in FIG. 24 to be used for production of electricity in a location where lava is accessible in accordance with the invention. Here in FIG**. 26** are illustrated two posts/towers **192** and **194** erected on either side of a lava flow/tube **196** with cable **193** suspended between them. Th**e** first heat exchanger **168** is lowered at safe distance close to lava flow **196** and the second heat exchanger **182** is coupled into boiler/evaporator **220** of the binary power unit **180** which is explained in FIGS**. 14** and **15.** Here are also illustrated turbines **230,** generator **250** and a condenser **260.** Here is also illustrated cooling system for the condenser **260** consisting of additional closed loop system **270** which consist of several interconnected back pressure reducing cylinders **262,** with coiled heat exchangers **268** inside; thermally insulating lines **272;** and heat exchanger **282** submerged into Ocean **165.** There is also an In-Line Pump **172** to circulate heat exchanging fluid through closed loop system **270.** The condenser **260** is elongated with back pressure reducing cylinders **262** to reduce back pressure which exists after steam passes through turbine compartment **230.** By implementing this methodology, for example, the State Hawaii could save around one billion dollars, which they spend yearly for purchase of oil for production of electricity. This portable system can be used in many locations with minor adjustments. For example, on the Erta Ale volcano, supporting towers **192** and **194** can be erected on top of the sides of the crater with cable **193** suspended between towers. Th**e** first heat exchanger **168** can be lowered close to lava lake which is visible several hundred feet below the top of the crater. Mobile binary power unit **180** can be assembled at safe distance nearby.

FIG. 27 illustrates a schematic cross sectional diagram of the heat exchange system **210** shown in FIG. 24 to be used for generation of electricity from heat sources such as oil well flare stacks in accordance with the invention. A gas flare, alternatively known as a flare stack, is a gas combustion device used in industrial plants such as petroleum refineries, chemical plants, and natural gas processing plants as well as at oil or gas production sites having oil wells, gas wells, offshore oil and gas rigs and landfills. Whenever industrial plant equipment items are over-pressured, the pressure relief valve provided as an essential safety device on the equipment automatically release gases which are ignited and burned. Here in FI**G. 27** are illustrated oil well flare stack **137,** support structur**e 138,** the heat exchange system **210** with first heat exchanger **168** positioned on top of supporting structur**e 138** and the second heat exchanger **182** coupled into the boiler/evaporator **220** of the binary power unit **180.** By circulating heat exchanging fluid

through closed loop system **210** heats from flam**e 139** is extracted through the first heat exchanger **168** and transferred through thermally insulated line **72** to the second heat exchanger **182** which heats a working fluid or water, depending on size and temperature, in th**e** boiler/evaporator **220** of the binary power unit **180.** Here are also illustrated main elements of the binary power unit **180,** turbines **230,** generator **250** and a condenser **260.** In this illustration the condenser **260** is cooled with additional closed loop system **270** consisting of th**e** first heat exchanger **268,** closed loop line **272** and the second heat exchanger **282** which can be submerged into nearby source of cold water **166** such as pool, lake, river, etc. Alternatively, an adjustable perforated shield can be installed on top of a flare stack covering one side of the first heat exchanger **168** and rotating, as needed, to prevent flame to be blown away from heat exchanger by wind. Contemporary believes that harnessing flare on top of stack is not feasible because it is difficult to envision a power plant on top of a flare stack. That contemporary believe is debunked by this invention by transferring heat from flame on top of a flare stack **137** trough heat exchange system **210** to the power unit **180** on the ground. For clarity and simplicity, here in FIG. **37** is illustrated first heat exchanger **168** positioned on top of supporting structur**e 138.** Alternatively the first heat exchanger **168** can be installed inside any chimney through which passes hot air, smoke, or steam and used that secondary heat source before it dissipate into the atmosphere. The universal heat exchange system **210** can be used in any situation where source of heat is difficult to access or is not suitable for relatively heavy equipment of a power plant or power unit. By implementing this methodology worldwide in industrial plants a lot of electricity can be produced from sources considered at this time as a waste.

FIGS. 24, 29-32, illustrates and explains an alternative option based on desalination of the Salton Sea by using the Salton Sea Geothermal Field (SSGF) and SCI-GHE system for production of electricity, fresh water and salt.

FIG. 29 illustrates the heat exchange system **210** with the first heat exchanger **168** lowered into the well-bore **30** at the source of heat (see **FIG. 30**), thermally insulated line **72,** and the second heat exchanger **182** coupled into the boiler/evaporator **217** of the power unit **280.** By circulating heat exchanging fluid through a closed loop system **210,** heat from hot rocks or hydrothermal reservoir is extracted through the first heat exchanger **168** and transferred through a thermally insulated line **72** to the second heat exchanger **182** which is coupled into a boiler/evaporator/distiller **217** of the power unit **280**. Salty water from Salton Sea is injected into the boiler/evaporator **217** through the pipeline **264** and valve **267** to the level **"H"** (see **FIGS. 30** and **31**). The second heat exchanger **182** which is coupled into a boiler/evaporator **217** heats salty water and steam is produced which turns the turbine **230** which is connected to and spins the generator **250** which produces electricity which is then transmitted through an electric grid. The power unit **280** has the condenser **260** which is cooled with an additional closed loop system **270** consisting of the first heat exchanger **268,** closed loop line **272** and the second heat exchanger **282** which is submerged in Salton Sea for cooling or if necessary nearby pool build for that purpose. Condensed steam from the condenser **260** exits power plant **280** through pipeline **256** to join pipeline **266** and returns fresh water into the Salton Sea. Alternatively, fresh water can be collected into large pools for use when needed in nearby agricultural fields (explained later on in FIG. 36-49). The pipeline **272** exiting the condenser **260** enters the heat exchanger containers **254** which are positioned underneath removable pans **252** located in nearby desalinization processing building **290** (see FIG. 31). The desalinization processing building **290** is closed and creates greenhouse effect.

Alternatively, if situation regarding desalinization of the Salton Sea changes, the boiler/evaporator **217** and cooling system of the condenser **260** of the power unit **280** can be

slightly modified to function solely as a binary power unit to generate only electricity.

The pipeline **72** after exiting the boiler/evaporator **217** branches into a pipeline **78** which also enters the heat exchanger containers **254** which are positioned underneath removable pans **252** located in a nearby desalinization processing building **290** to induce evaporation (see FIG. 31).

When the salty water in the boiler **217** reaches level **"L"** the salinity level is high and is released through a valve **269** and pipeline **265** into collector pools **263** and subsequently into a nearby desalinization processing building **290** in which salt and clean water is produced. Salty water from collector pools **263** is distributed into removable pans **252** which sit on the heat exchanger containers **254** which are filled with heat exchange fluid and accommodates three pipelines, **78, 272** and **108** which heats heat exchange fluid in containers **254** and indirectly heats salty water in pans **252.** Salty water evaporates from heated pans **252** and condenses around condensers panels **279** which are positioned under a roof structure **292** of the desalinization processing building **290.** The pipeline **278** after branching from pipeline **272** enters a ceiling section of the desalinization processing building **290** and functions as a condenser. Condensed fresh water **293** drops, as rain, into channels **294** from which it is then collected into containers **271** and returned into the Salton Sea through a pipeline **266** (see **FIG. 31** and **32**). After heated water evaporates from pans **252** a layer of salt will form on the bottom of the pans **252.** The removable pans **252** containing salt can be raised with cables and ratchets or hydraulic systems so that one end of the removable pans **252** is higher than the other (illustrated with a dash line in FIG. 31**)** and then slightly jerked and then salt is unloaded on a vehicle or platform for transport. The profile of the removable pan **252** on the lower end is slightly larger for smoother unloading and can have closing and the opening mechanism (not shown in this illustration). A well **30** is also illustrated with Blow Out Preventer **31** and derrick **240** above it. Further, two sections of the desalinization processing building **290** are illustrated. The building can have many such sections to allow continues process of loading salty water in one section and unloading salt from another section.

FIG. 30 is a cross sectional view taken along line **30-30'** of FIG**. 29.** In addition to its previously explained elements and functions in FIG. **29,** this illustration shows a well-bore **30** with casing **247** and the first heat exchanger **168** in it, and the other elements of the power plant **280.** Also illustrated as an alternative option is, at the bottom of the well-bore **30,** an In-Line Pump **172** which can be attached, if needed, to the first heat exchanger **168** to circulate geothermal fluids upward and around the first heat exchanger **168** for more efficient heat exchange. Also, illustrated is an In-Line Pump **172** having two fluid stirring elements **173** on each end. The fluid stirring elements **173** are simple structural pipe sections with openings on the side wall, preferably at an angle (not shown in this illustration). The purpose of the fluid stirring elements **173** on the lower end of the In-Line Pump **172** is to direct surrounding geothermal fluid into the In-Line Pump **172.** The purpose of the fluid stirring elements **173** on the upper end of the in-line pump **172** is to direct geothermal fluid from the In-Line Pump up and around the first heat exchanger **168**. Also here illustrated is the base of the structural pipe **185.**

FIG. 31 is a cross sectional view taken along line **31-31'** of **FIG. 29**. This illustration shows removable pans **252** which sits on the heat exchange containers **254** which are filled with heat exchange fluid and accommodates three pipelines, **78, 272** and **108** which heats, heat exchange fluid in containers **254** and indirectly heats salty water in removable pans **252** and induces evaporation**.** Also shown is a thermal insulator and supporting structure **255** under the containers **254**. This illustration also shows roof structures **292** of the closed desalinization processing building **290** with pipelines **278** which supply cold water to the condenser panels **279.** Condenser panels are illustrated in two alternative positions on the left and right side of the

building **290.** Also shown are collecting pans **284** positioned underneath condenser panels **279** (illustrated in **FIG. 32).** Also illustrated are plastic curtains **276** with vertical tubes **296** which collect and funnel condensed droplets **293** into provided channels **294.** The plastic curtains **276** preferably, can be inflatable structure to provide thermal insulation between warm lower section and colder upper section of the building **290**. If necessary, the upper section can be also cooled with an air-condition system. Also, shown are raised, removable pans **252** (in dash line). Also, shown are thermo-solar panels **106** on the roof of the desalinization processing building **290** and corresponding heat exchange line **108** inside the heat exchanger containers **254** which is illustrated and explained in **FIG. 32.**

FIG. 32 illustrates a perspective cross-sectional diagram of an alternative thermo-solar heat exchange system **70** to be used in the desalinization plant shown in **FIGS. 29-31.** Here is illustrated, an optional solution, thermo-solar panel **106** positioned on the roof of the desalinization processing building **290** to be used for heating heat exchange fluid in the container**s** **254** and indirectly heating salty water in pans **252** to induce evaporation. Here is also illustrated a plate **283** at the bottom of the condenser **279** which functions as a frame for the condenser **279** and also as an electrode positively (+) charged. The condenser **279** is coated with super hydrophobic material to induce release of tiny water droplets from the condenser and subsequently to improve the condensation process. Here is also illustrated a pan **284** positioned underneath condenser **279**. The pan **284** has a "Y" shape profile and collects condensed droplets **293** from the condenser **279** and delivers fresh water **295** into containers **271** (shown in **FIG. 29**). The fresh water **295** is then pumped into the sea or used for different purpose. The pan **284** is negatively charged to improve the condensation process.

The thermo-solar heat exchange system **70** could function with geothermal support or independently in desalinization process.

Production of salt can have commercial value. Salt has been mined for centuries to help preserve food and enhance its flavor. Today, salt is also processed into chlorine gas – a major component for making plastic, bleach and paper. Alternatively, if production of salt is not needed anymore for whatever reason (enough produced or oversaturated market or disposal problem, etc.) then power plants **300** can easily switch to alternative design to bypass the production of salt and produce only electricity and fresh water as explained in FIGS. 37- 49.

FIGS. 37- 49 illustrates and explains an alternative option for restoration of the Salton Sea based on connecting the Salton Sea with the Ocean and using the Salton Sea Geothermal Field (SSGF) and SCI-GGG and /or SCI-GHE system for production of electricity and fresh water.

As mentioned earlier the Salton Sea is California's largest lake and is presently about 50 percent saltier than the ocean. The Salton Sea is a "terminal lake," meaning that it has no outlets. Water flows into it from several limited sources, but the only way water leaves the sea is by evaporation. The Salton Sea Geothermal Field (SSGF) is a high salinity and high-temperature resource. The earth's crust at the south end of the Salton Sea is relatively thin. Temperatures in the Salton Sea Geothermal Field can reach 680 °F less than a mile below the surface. There are already several conventional geothermal power plants in the area. The lake is shrinking exposing the lake bed and salinity level is increasing which is pending environmental disaster and a serious threat to multi-billion-dollar tourism. FIGS. 37- 49 illustrate and explain a concept for restoration of the Salton Sea in accordance with surrounding conditions. This concept is not limited to the Salton Sea in

California, and therefore can be used in similar locations with prevalent geothermal sources, proximity to the Ocean and/or fresh water.

Summary of the Proposal for Restoration of the Salton Sea:

The objectives of the enclosed Proposal for Restoration of the Salton Sea are:

1. Raising and stabilizing the lake's waterline level by connecting the Salton Sea with Pacific coast (Phase I);

2. Preventing further pollution of the lake by building two main dikes forming a central mass of water and two peripheral reservoirs for containing and treating farmland runoff waters and providing wildlife sanctuary (Phase II);

3. The equalizing salinity of the salty terminal lake (Salton Sea) water with salinity of the oceanic water and subsequently providing conditions for tourism and making Salton Sea a renewed recreational destination (Phase I & II); and

4. Harnessing prevalent geothermal source of the Salton Sea Geothermal Field (SSGF) for generation of electricity and production of fresh water – both having commercial value (Phase III, IV & V**).**

The proposal for restoration of the Salton Sea consists of five Phases:

Phase I – Connecting the Salton Sea with the Ocean (San Diego, Oceanside area) with several pipelines (inflows and outflows);

Phase II - Building two main dikes - one in northern and one in southern part of the Salton Sea.

Phase III – Building one power plant using (SCI-GHE) system at one of selected sector; alternatively, first Power Plant could use binary system to provide electricity during production of Phase I and pumping system.

Phase IV – Building several more power plants using (SCI-GHE) system - one in each selected sector; and

Phase V – Continued buildup of additional power plants using (SCI-GHE) system at each selected sector; this phase (Phase V) can be built rapidly with additional investments or alternatively at a slower pace by investments from a portion of revenue generated from preceding power plants.

Phase I:

Phase I consists of building an ocean pipeline system connecting the Salton Sea with Pacific coast - San Diego or Oceanside area. The pipeline may have preferably 8 pipelines (4 inflow and 4 outflow) following FWY 8 or FWY 10 to Beaumont, then 79, Temecula, etc. or around the mountains through Riverside or any other preferred corridor. Having Phase I finished we would be able to pump out high salinity water from the bottom of the Salton Sea and inject it into the Pacific Ocean and bring Oceanic water into the Salton Sea. High salinity water has a

higher density and has a tendency to accumulate in the bottom of the Salton Sea. By connecting the Salton Sea with the Ocean we would be able to control the level of the Salton Sea and equalize (reduce) salinity of the Salton Sea with the salinity of the Ocean. Why San Diego area and not the Sea of Cortez?
The Sea of Cortez has stationary water and we may end up exchanging the same fluid. Pacific coast has strong current and high salinity water from the Salton Sea will disperse into the vast Ocean without negative effect on marine life. Also, this way we will eliminate "other country issue". In some embodiments, the ocean pipeline system may comprise at least three ocean pipelines fluidly connecting an ocean with a central mass of water in a salty terminal lake, such as the Salton Sea. Two of the at least three ocean pipelines provide inflow into the salty terminal lake and one pipeline provides outflow from the salty terminal lake for controlling the lake water level.

Phase II:

Phase II consists of a building of two dikes - One in northern and one in southern part of the Salton Sea – providing reservoirs for runoffs water from nearby farmland in which is runoffs water temporally contained, and if necessary treated, before pumping it back and reusing it for farmland. An example for the treatment of wastewater can be the Arcata Wastewater Treatment Plant and Wildlife Sanctuary. It is an innovative sewer management system employed by the city of Arcata, California. A series of oxidation ponds, treatment wetlands and enhancement marshes are used to filter sewage waste. Alternatively, water from reservoirs can be pumped into "outflow" pipeline(s) for dispersing it into vast Pacific Ocean or can be injected into wells for forming or maintaining geothermal reservoirs for better heat transfer to the heat exchange system.

Benefits of Phase I & II:

1. By saving and restoring the Salton Sea we will continue having a substantial water surface in our proximity which has a positive effect on our local climate.

2. After several years the Salton Sea will contain mostly oceanic water. By controlling inflow and outflow at the Salton Sea we can produce a surplus of (now) oceanic water to be used for feeding geothermal power plants for generation of electricity and fresh water.

3. As a renewed recreational destination the Salton Sea area will flourish with tourism. Beaches can operate all year around. It would provide a base for building memorable restaurants, resorts and waterfront communities.

4. The wildlife sanctuary will thrive and ecosystem will benefit.

Consequences if we don't restore the Salton Sea:

1. If we don't restore and save the Salton Sea it will dry out with the exception of one or two relatively small ponds which will have extremely high salt concentration and will be toxic. A huge lake bed will be exposed and we would encounter negative effects such as dust storms and health issues associated with it such as asthma and other respiratory diseases;

2. Already established wildlife will gradually disappear;

3. Real estate value depreciation in nearby areas and subsequently reduction in businesses

and population will occur. In a recent report, the Oakland-based Pacific Institute projected that without action to address the Salton Sea's deterioration, the long-term social and economic costs — in higher health care costs and lower property values, among other costs — could range between $29 billion and $70 billion over the next 30 years.

Cost estimate for Phase I & II

Although we don't have an exact cost estimate at this time it is important to understand the importance of implementation of this proposal for restoration of the Salton Sea and the ratio of its cost and benefits. Whatever initial cost to build the Phase I & II is going to be - $2 billion, $3 billion or even $4 billion - it is imperative that we do it because it is the foundation for subsequent phases which have great potential for generating revenue in the hundreds billion of dollars, economic development and clean environment. The In-Line Pump (illustrated in FIGS. 22 & 23) should be used for two way pipelines connecting the Salton Sea with Pacific coast because this system requires the least energy for operation. Each In-Line Pump is an efficient pumping device and would reduce the final cost of the project. It functions as a generator at downhill flow routes – it generates electricity, which can be added as a supplement to energy needed for uphill and horizontal flow routes. We should have at least 3 bidders (contractors) and select one with most affordable price and best credentials. In addition to private sector, local politicians should initiate an aggressive effort on state and federal level asking for grant or long term loan for implementation of the Phase I & II. As is the case with any new technology, it is difficult to predict the exact costs for development and implementation of the "Scientific Geothermal Technology" but because of the unique location, having a source of heat - mantle plume under the Salton Sea Geothermal Field (SSGF) - and the simplicity and obviousness of the system, the revenue generated from harnessing geothermal energy is expected to be in the hundreds billion of dollars in several decades and will continue generating such revenue in the future. Therefore, whether initial expenses of the project are $9 billion or $17 billion is less relevant in comparison to long term benefits gained for economy and environment.

Another strong point of proving irrelevancy of the initial cost of the project is that in a recent report, the Oakland-based Pacific Institute projected that without action to address the Salton Sea's deterioration, the long-term social and economic costs — in higher health care costs and lower property values, among other costs — could range between $29 billion and $70 billion over the next 30 years.

The ratio of cost and benefits of this proposal for restoration of the Salton Sea can be compared to the ratio of cost and benefits of the Hoover Dam.

How to pay for Phase I & II?

A substantial portion of the cost for the Phase I & II could be paid in the future from portion of revenue generated from tourism. Also, a portion of the cost for the Phase I & II could be paid from the revenue generated from Geothermal Power Plants during and after building up of Phase V.

Phase III:

Phase III consists of building the first Power Plant at one selected sector, in accordance with the proposal, using Self Contained In-Ground Heat Exchanger (SCI-GHE) system modified so to use salty water from the lake to generate electricity and having byproduct fresh water.

Portion of generating revenue from producing electricity and fresh water can be used for building subsequent power plants of (Phase IV). By having saved the Salton Sea (Phase I & II) we will have plenty of (now) oceanic water for operating many Power Plants in the surrounding area. Alternatively, for the first Power Plant (Phase III) we could use binary system to provide electricity during construction of the (Phase I) and further for pumping fluids through the pipeline system.

Phase IV:

By having saved the Salton Sea (Phases I & II) and finished building the first Power Plant (Phase III) using the Self Contained In-Ground Heat Exchanger (SCI-GHE) system we can start building several additional power Plants – one on each selected sector in accordance with the proposal;

Phase V:

Phase V consists of continued buildup of additional Power Plants. By having saved the Salton Sea (Phase I & II) we will have plenty of ocean water for operating series of Power Plants using the Self Contained In-Ground Heat Exchanger (SCI-GHE) system modified so to use salty water from the lake to generate electricity and produce fresh water. By using the Self Contained In-Ground Heat Exchanger (SCI-GHE) system we are not limited to geothermal reservoirs. Because of the unique location, having mantle plume under the Salton Sea Geothermal Field (SSGF), the potential for the profit by harnessing geothermal energy is enormous. This phase (Phase V) can be built rapidly with additional investments or alternatively at a slower pace of investments from portion of revenue generated from preceding power plants.

FIGS. 37- 49 illustrates and explains an alternative option for restoration of the Salton Sea based on connecting the Salton Sea with the Ocean and using the Salton Sea Geothermal Field (SSGF) and SCI-GGG and /or SCI-GHE system for generation of electricity and production of fresh water .

This concept is not limited to, the Salton Sea in California, therefore can be used in locations with similar conditions with prevalent geothermal sources, proximity to the Ocean and/or fresh water.

FIG. 37 is a plain view of a large salty body of water and schematic diagram of pipeline systems associated with a proposal for restoration of the Salton Sea. Here is illustrated: a plain view of a large salty body of water **156** with dikes **157** and **158** on northern and southern part of the lake **156.** Here are also shown array of Power Plants **300** on several sectors. Also shown here is **d** diagram of pipelines system for exchanging waters from the lake and the ocean using outflow line **330** and inflow line **350.** Here is also shown feeding pipelines **264** for injecting water from the Salton Sea (lake) **156** into geothermal power plants **300** for generation of electricity. Also, here are shown pipelines **265** for transport of high salinity water from power plants **300.** Here are also shown freshwater lines **256**. The Power plants **300** using Self Contained In-Ground Heat Exchanger (SCI-GHE) system is modified to use salty water from the lake **156** to generate electricity and produce fresh water and is explained in more details in FIGS. 41-49.

Two dikes **157** and **158** are positioned on northern and southern side of the lake **156** to form reservoirs **204** and **206** for separating and collecting runoff waters contaminated with fertilizers and pesticides from nearby farmland and to prevent further pollution of the lake. Reservoirs **204** and **206** are divided with internal dikes **197** and **198** into smaller sections designed for the

treatment and purification of polluted runoff water. An example for the treatment of wastewater can be the Arcata Wastewater Treatment Plant and Wildlife Sanctuary. It is an innovative sewer management system employed by the city of Arcata, California. A series of oxidation ponds, treatment wetlands and enhancement marshes are used to filter sewage waste.

Polluted water is temporally contained, and if necessary treated, in reservoirs **204** and **206** before pumped back and reused at nearby farmland trough pipeline **337** and/or **339** (FIG.38). Two reservoirs **204** and **206** are connected with additional pipeline branches **333** and **334** to the "outflow" pipeline **330**. Alternatively, water from reservoirs **204** and **206** can be pumped into "outflow" pipeline **330** and dispersed into the vast Pacific Ocean or disposing it into wells and forming or maintaining geothermal reservoirs for better heat transfer to the heat exchange system **210**.

Polluted water is temporally contained, and if necessary treated, in reservoirs **204** and **206** before pumped back and reused at nearby farmland trough pipeline **337** and/or **339** (FIG.38). Two reservoirs **204** and **206** are connected with additional pipeline branches **333** and **334** to the "outflow" pipeline **330**. Alternatively, water from reservoirs **204** and **206** can be pumped into "outflow" pipeline **330** and dispersed into the vast Pacific Ocean or disposing it into wells and forming or maintaining geothermal reservoirs for better heat transfer to the heat exchange system **210**.

The pump-stations **301** and **302,** and inflows pipelines **350** and outflow pipeline **330** can use the "In-Line Pump" **172** illustrated and described in FIGS. 22 and 23. The IN-LINE PUMP **172** is an electromotor cylindrical shape and can be inserted as a repetitive segment in the pipeline and has no length limitation, therefore increasing power to the electromotor imparts added pumping to circulate fluid at desired speed. The "In-Line Pump" **172** is an efficient pumping device and would reduce the final cost of the project. It functions as a generator at downhill flow routes – it generates electricity, which can be added as a supplement to energy needed for uphill and horizontal flow routes.

The "inflow" pipeline **350** pumps oceanic water and transfers it into the salty body of water (lake) **156**. Having at least three pipelines we can exchange high salinity water from the bottom of the lake **156** with one pipeline and use other two pipelines for bringing oceanic water into the lake **156**. By controlling water exchange from the lake and the Ocean we can reduce salinity and increase water level of the lake and eventually equalize salinity of the lake with oceanic water. Pacific coast has strong current and dispersed high salinity water will have no negative effect on marine life.

Here is also illustrated an optional pipeline **258** for transporting fresh water from power plants **300** on the eastern sector directly to canal **316.** Here are also illustrated a set of power plants **300** at southern sector taking oceanic water directly from inflows pipelines **350** through pipeline branch **351** and returning high salinity water into outflow pipeline **330** through pipeline branch **265**. Here in southern sector is also shown pipeline **256** for distributing fresh water produced in power plant **300**. Amount of producing fresh water from power plants **300** is approximately half of the amount of used oceanic water.

FIG. 38 Illustrate a plain view diagram of array of geothermal power plants **300** at a location east of the Salton Sea with an alternative cooling system using cold water from nearby canal **316**. For clarity and simplicity, here are shown only power plants **300** at only one sector. Here is illustrated an alternative option for cooling condensers of the power units of the power

plants **300** with closed loop system **310** having inflow line **312** and outflow line **314** by using relatively cold water from nearby canal **316**. Water used for cooling condensers is returned back without any lost into canal **316** by outflow line **314** for its original intended purpose. This cooling system is explained in more details in FIG. 44. Here is also illustrated a secondary binary power unit **355** for additional extraction of heat from outflow cooling line **314**, if necessary. The power unit **355** is explained in more details in FIG. 47.

FIG. 39 Illustrate a plain view diagram of array of geothermal power plants **300** at an alternative sector southeast of the Salton Sea at location with great geothermal potential. The functioning concept of power plants **300** in each sector around the Salton Sea is similar and will be explained in following FIGS. 41-47.

FIG. 40 is a plain view diagram of array of geothermal power plants **300** at the same location as explained in previous FIG. 39 with a schematic diagram of an alternative cooling system **310** as explained in FIG. 38. Here is illustrated an alternative option for cooling condensers of the power units of the power plants **300** with closed loop system **310** having inflow line **312** and outflow line **314** by using relatively cold water from nearby canal **317**. Water used for cooling condensers is returned back without any lost in nearby canal **317** by outflow line **314** for its original intended purpose. This cooling system is explained in more details in FIG. 44.

FIG. 41 is a plain view of a schematic diagram of the geothermal power plant **300** with an array of 24 wells **30**. For clarity and simplicity, here is shown only one section of the power plant **300** with 6 wells and corresponding 6 power units **280**. Also, shown here, is heat exchange systems **210** connecting first heat exchanger **168** inside well **30** and the second heat exchanger **182** inside boiler **217** (illustrated in more details in FIG. 45). Here are also illustrated control center **200**; fresh water pond **274**; mineral processing building **290** (optional); railroad tracks **325**; and access road **327**; The power units **380** having boiler / evaporator **217;** turbines **230; a** condenser **360;** and generator **250 are** explained in more details in following illustrations. The other three quarters of the power plant are identical. Desalinization building **290** is shown here as an optional facility that can be utilized, if needed, for the production of salt and other minerals. A further embodiment of this invention is that power plants **300** consisting of power unites **380** is a modular system capable of easy adjustments and reproduction.

It is also an embodiment of this invention that power plant **300** is based on array of multi wells with relevant power units **380** of medium or smaller sizes which can extract heat from underground heat source more efficiently and with fewer limitations than in conventional systems where a single power unit is used and supplied with fluids from natural or man-made hydrothermal reservoir. By having more wellbores **30** which length (depth) can periodically be extended and having more corresponding portable multi heat exchangers **168** inside them increases heat exchanging surface of the wellbores **30** and heat exchanging surfaces of the heat exchangers **168** altogether. Here presented power units **380** can be portable, easily managed, and replaced if needed with different capacity power units. Alternatively, several wells with corresponding heat exchange systems **210** of one section of the power plant **300** can be arranged to supply heat to one or more power units **380** as illustrated in FIGS. 16-19, 45 and 47.

FIG. 42 illustrates an enlarged schematic diagram of the one section of the geothermal power plant **300** shown in FIG.41. Here are illustrated power units **380** having boiler / evaporator **217,** turbines **230,** condenser **360,** and generator **250** with a schematic diagram of fluid flow systems associated with a power plant. Also, shown here, is heat exchange systems **210** connecting first heat exchanger **168** inside well **30** and the second heat exchanger **182** inside

boiler **217** (illustrated in more details in FIG. 45). Here is illustrated pipeline **264** with extended branch **261** that supply the boiler/evaporator **217** with water from **a** salty body of water **156** and pipeline **265** for disposal of high salinity water from boiler/evaporator **217.** The pipelines **264** with extended branch **261** and pipeline **265** are aligned together at certain length for the purpose of exchanging heat from hot pipeline **265** to pipelines **264** and **261** to warm up water entering the boiler **217.** Those pipes pass through heat exchange container **253** similar to the heat exchange container **254** illustrated and explained in FIG. **32.** Also, here is shown a inflow cooling pipeline **273** that takes water from fresh water pond **274,** passes through condensers **360,** cools it, and returns through outflow cooling line **275** back into fresh water pond **274.** Here is also shown pipeline **256** that delivers condensed fresh water from the condenser **360** into fresh water pond **274.**

FIG. 43 illustrates an enlarged schematic diagram of the one section of the geothermal power plant **300** shown in FIGS.41 and 42 with an alternative cooling system. Here is shown condenser **361** which optionally can be cooled with fan and air circulation instead with water. Alternatively, the boiler **217** can be modified so that fresh water or other working fluids can be used and recycled**.**

FIG. 44 illustrates an enlarged schematic diagram of the one section of the geothermal power plant **300** shown in FIGS.41 with an alternative cooling system. Here are shown all elements as in FIG. 42 with difference that condenser **360** is cooled with relatively cold water from nearby canal **316**. Here is also shown pipeline **261** that supply the boiler **217** with water from **a** salty body of water **156** and pipeline **265** for disposal of high salinity water from boiler/evaporator **217. A f**urther embodiment of this invention is that additional existing available sources at location, such is relatively cold water from nearby canal **316**, is integrated in function of the power plant **300**. Here are shown inflow line **312** and outflow line **314** of the closed loop cooling system **310** used for cooling condensers **360.** (See FIG. 38). Water used for cooling condensers **360** is returned back into a canal **316** without any lost. Here is also shown mineral processing building **290** as an optional facility that can be utilized, if needed, for the production of salt and other minerals. Also, here is shown water pond **274** for collecting fresh water from condensers **360** which can be used for agriculture and other applications. Here also is shown an optional pipeline **257** bypassing water pond **274** and connecting fresh water pipeline **256** from condensers **360** directly to canal **316**.

FIG. 45 is a cross sectional view of one power unit **380** of the power plants **300** taken along line **45-45'** of FIG. 47. This illustration is similar to illustration explained earlier in FIG. 30, with minor modifications made to accommodate additional relevant illustrations. In this illustration also are shown well-bore **30** with casing **247.** Also, here is shown the first heat exchanger **168** inside well and the second heat exchanger **182** inside boiler/evaporator/distiller **217** with other elements of the power unit **380 -** turbines **230**, condenser **360**, and generator **250.** Here is also shown at the bottom of the well **30,** an In-Line Pump **172** which can be attached, if needed, to the first heat exchanger **168** to circulate geothermal fluids upward and around the first heat exchanger **168** for more efficient heat exchange. Here is illustrated an In-Line Pump **172** having two fluid stirring elements **173** on each end. The fluid stirring elements **173** are simple structural pipe sections with openings extending slightly off the center line of the pipeline. The purpose of the fluid stirring elements **173** on the lower end of the In-Line Pump **172** is to direct surrounding geothermal fluid into In-Line Pump **172** and purpose of the fluid stirring elements **173** on the upper end of the In-Line Pump **172** is to direct geothermal fluid from the In-Line Pump **172** up and around the first heat exchanger **168**. The first heat exchanger **168** can cool its surrounding relatively fast therefore circulating geothermal fluid up and down well and around

heat exchanger **168** imparts heat exchange process. Here is also illustrated base of structural pipe **185** which extends to the bottom of the well**.** Extended the length of the well-bore **30** and structural pipe **185** provides increased surface of the walls providing more heat to be extracted. A further embodiment of this invention is that in wells without natural geothermal fluid (dry wells), we can inject our waste water, for example, high salinity water from boiler **217,** to provide the heat exchange medium.

Here is also shown at least one an In-Line Pump **172** which circulates heat exchange fluid through closed loop system **210** connecting heat exchangers **168** and **182**. As explained in previous illustrations water from the salty body of water (lake) **156** is injected through pipelines **264** and **261** into boiler **217** at level "H". Water in boiler **217** is heated through heat exchanger **182.** Produced steam from boiler **217** is controlled by valve **288** and turns turbines **230** which is connected to and spins generator **250** which produces electricity which is then transmitted though electric grid. Exhausted steam after passing through turbines enters inner piping system **362** of the condenser **360.** The inner piping system **362** inside condenser **360** is surrounded with circulating water, which enters through pipeline **312** and exits through pipeline **314.** The inner piping system **362** is a spiral coiled pipe with closed end on top. Several condensers **360** can be assembled as better illustrated in FIG. 46. "Back Pressure" is a term defining pressure that usually exists after steam passes though turbine and decreases efficiency of the turbines. A further embodiment of this invention is that exhausted steam passing through inner piping system **362** reduces and preferably eliminates the "Back Pressure". The Back Pressure is substantially reduced or eliminated by increasing length of the inner piping system **362** or adding more condensers**.** Also shown here is collected fresh water under condenser **360** which is transported through pipe **256**. Here is also shown "Blow Out Preventer" **31** and derrick **240** on dollies **238** which will be explained in more details in subsequent application relevant to drilling.

FIG. 46 is a cross sectional view taken along line **46-46'** of FIGS. 45, 47, and 48. Here are shown a set of three condensers **360** with inner piping system **362** connected through distributor chamber **363**. The distributor chamber **363** can be equipped with automatic control valves to control opening and closing of each condenser as needed. Here is also shown inner piping system **362** inside condenser **360** surrounded with circulating water, which enters condensers **360** through pipeline **312** and exits through pipeline **314.**

FIG. 47 is schematic diagrams of a geothermal power unite **380** of the power plant **300** illustrated in FIG.45 with an alternative secondary power unit aside **355**. Here are shown main elements of the power units **380 –** wellbore **30,** closed loop system **210,** boiler **217,** turbines **230**, condenser **360**, and generator **250.** The boiler **217** is heated trough heat exchanger **182** which is part of closed loop system **210.** Here is also shown condenser **360** with cooling water pipeline inflow **312** and outflow **314. A f**urther embodiment of this invention is that secondary binary power unit **355** is connected to the pipeline **72** of the closed loop system **210** on the way out of boiler **217** for additional extraction of heat and additional generation of electricity. The secondary power unit **355** consists of two interconnecting binary power units **381** and **382**. Binary power units **381** and **382** have the same elements as power unit **380** with exception boilers are not filled with salty water from the lake **156** instead; they are filled with working fluid that has a lower boiling point than water. There are different kinds of working fluids with different boiling points.

The power unit **382** has a lesser capacity than power unit **381** and uses working fluid that has a lower boiling point than is used in power unit **381.** The secondary power unit **355** uses same cooling water pipeline inflow **312** and outflow **314** as power units **380.** The secondary power unit **355** doesn't produce fresh water. The power unit **355** is also illustrated in FIG. 38 as a part of the

cooling closed loop system **310.** The power unit **355** is illustrated here as a secondary binary power unit, although it can be used as a primary system (also illustrated in FIGS. 16 & 17). The binary power unit **355** can be used as a primary system, especially if Phase I & II of the proposal for restoration of the Salton Sea (connecting Salton Sea with Ocean), are for whatever reason, rejected and Oceanic water cannot be used.

FIGS. 48 is a schematic diagram of an alternative power unite **390** of the geothermal power plant **300** modified for generation of electricity, production of fresh water and extraction of minerals. This plan view illustrates an alternative geothermal power unit **390** designed for locations where subsurface and the geothermal resources therein are rich with minerals. Here are shown a power unit **390** with main elements - derrick **240,** well **30**, boiler **217**, turbines **230**, condenser **360** generator **250** and processing building **290.** Th**e** power unit **390** functions similarly as power unit **380** which is previously explained. Difference in function of the power unit **390** is that geothermal brine, which is rich in minerals**,** is excavated through thermally insulated excavation line **372** to the surface and injected into heat exchange coil **181** which is coupled inside boiler **217.** Hot geothermal brine travels downhill through heat exchange coil **181** and heats boiler **217** which is filled with salty water from the lake **156** through pipeline **261.** Produced steam from boile**r 217** is controlled with valve **288** and turns turbines **230** which is connected to and spins generator **250** which generates electricity which is then transmitted though electric grid. **A f**urther embodiment of this invention is that geothermal brine is transported from boiler **217** through brine line **364** to the processing building **290** for extraction of different minerals.

The function of the processing building **290** is explained in FIGS. 29, 31 and 32 which is to induce evaporation by heating, removable pans **252** and to induce condensation for production of the salt and fresh water. Similarly, the same function of the processing building **290** can be used for extraction of the different minerals such as lithium, magnesium, etc., from geothermal brine. Processing buildings **290** are strategically positioned in the mid-section of the power plant **300** to accommodate array of 6 wells in each section of the power plant **300.** Additional sections in the processing building **290** can be added, if needed, for syntheses and electrolysis process. Alternatively, waste material brine, after extraction of minerals in processing building **290,** is returned trough pipeline **374** back into well **30.** Also shown here is an alternative pipeline **367** used for high salinity water from boiler **217** level "L", if needed, to be added to geothermal brine in pipeline **364** on the way to processing building **290.** Also shown here is an alternative pipeline **368** used for high salinity water from boiler **217** level "L" to be injected into well **30** for replenishing underground geothermal reservoir and sustaining the well **30**. Here are also shown inflow line **312** and outflow line **314** of the closed loop cooling system **310** used for cooling condenser **360.** (See FIG. 38). Here is also shown fresh water line **256**. The surfaces of the boiler and pipeline system can be painted with epoxy bland that resist corrosion in salty water.

Mining on top of the volcano or caldera is not a wise selection for location for excavation of minerals because at such locations the Earth's crust is thin and there is a mantle plume below. Therefore, if mining is conducted it should be at minimal capacity and well should be replenished. The concept of power unit **390** is introduced here as alternative to main concept of power unit **380** to be used periodically. There is a movable derrick **240** on a railroad track **325** for maintaining array of 24 wells at each power plant. The Power unit **390** can be deployed periodically at each well.

FIG. 49 is a cross sectional view of an alternative power unit **390** taken along line **49'-49'** of FIG. 48. All elements and function of the power unit **390** is explained in previous FIG. 48. A further embodiment of this invention is that brine excavation pipeline **372** can be assembled

with a repetitive segment of In-Line Pumps **172.** This way will be eliminated excavation problems which are present in conventional drilling, geothermal and oil industries, especially in cases where geothermal fluids are deep and geo-pressure is low or doesn't exist.

This proposal explains a method of how to use unlimited sources of geothermal energy which has not been used in this way today. This proposal explains how to use the internal heat of our planet combined with local condition on surface for generation of electricity and production of fresh water.

This proposal is a feasible conceptual solution for restoration of the Salton Sea containing several alternative solutions. Final and the best solution can be selected after consultations with the Salton Sea Authority, local, state, federal and other relevant authorities. The public should be informed about this proposal too.

- *What type of facilities should be built?*

The proposal for restoration of the Salton Sea consists of five Phases:

Phase I - Connecting the Salton Sea with the Ocean (San Diego, Oceanside area) with several pipelines (inflows and outflows);

Phase II - Building two main dikes - One in northern and one in southern part of the Salton Sea.

Phase III - Building one power plant using (SCI-GHE) system in one of selected sector;

Phase IV - Building several more power plants using (SCI-GHE) system - one in each selected sector; and

Phase V – Continued buildup of additional power plants using (SCI-GHE) system in each selected sector;

About Technology:

The proposal for restoration of the Salton Sea implements the Scientific Geothermal Technology modified so to include local conditions. The Scientific Geothermal Technology (The Self Contained In-Ground Geothermal Generator; The Self Contained Heat Exchanger; and The IN-LINE PUMP) consist of several designs and variations complementing each other and/or operating separately in many different applications in the energy sectors. The In-Line Pump should be used for two way pipelines connecting the Salton Sea with Pacific coast because this system requires the least energy for operation.

As a first option for electricity generating unit, to be implemented, for this proposal is the "Self Contained In-Ground Heat Exchanger" (SCI-GHE) system. It has less production capacity than the Self Contained In-Ground Geothermal Generator (SCI-GGG) system, but is less expensive to produce and to implement. Later on when the (SCI-GHE) system starts generating revenue it can be replaced with (SCI-GGG) system which at this stage requires more investment and time for full development.

In summary: The function of the "Self Contained In-Ground Heat Exchanger" (SCI-GHE) system

consists of several stages:

1. Extracting heat from prevalent geothermal sources;

2. Transferring heat up to the ground surface through completely closed loop system (no need for geothermal fluid to be pumped to the surface as is the case with conventional geothermal systems);

3. Using extracted heat from geothermal sources for generation of electricity for commercial and residential use; and

4. Producing fresh water as a byproduct without spending additional energy for its production.

Phase III - One proposed power plant consists of 24 wells with 24 modular power units with the SCI-GHE systems spread peripherally forming a circle with a diameter of about 1,500 feet. Each of the four sections with 6 wells and one mineral processing building can operate separately as one modular unit. Required space for one power plant is preferably about 2,000' x 2,000' (about 90 - 95 acres). The schematic plan of one modular unit of the power plant with the SCI-GHE system and the desalinization building nearby is illustrated and explained in conceptual drawings FIGS. 24, 29, 30, 31, 32, and 41-49. Phase I & II are illustrated and explained in FIGS. 37-40. (See accompanying Appendix below).

We all know that there is an enormous source of energy under our feet whether it is a few miles underground or on the surface in locations such as Hawaii. The question was, until now, how to harness it expediently and efficiently?

- *How many facilities are needed and where should they be located?*

After raising and stabilizing lake's waterline level by connecting the Salton Sea with Pacific coast (Phase I) and after building two main dikes forming central mass of water and two peripheral reservoirs for containing and treating farmland runoff waters and providing wildlife sanctuary (Phase II) - then we can build many power plants using SCI-GHE system for harnessing prevalent geothermal source of the Salton Sea Geothermal Field (SSGF) for generation of electricity and production of fresh water (Phase III, IV & V). The Power Plant with the SCI-GHE system consists of several modular power units. Many additional power plants can be built. Location should be at the Salton Sea Geothermal Field (SSGF) around the south east shore of the lake. Modular implementation of the SCI-GHE system creates immediate revenues and allows the continued buildup of additional modular units. FIGS. 37 - 40 illustrate several proposed locations (sectors) for implementations of Phase III – V.

- *What inputs into your system(s) are required and what are the outputs?*

In Phase I:
Input is ocean water into the Salton Sea.
The output is high salinity water from the bottom of the Salton Sea to be dispersed into the vast ocean.

In Phases III, IV & V:
There are no inputs, such as fuels for the operation of the proposed Power Plant for generation of

electricity using the SCI-GHE system. For the operation of the proposed Power Plant only input for production of steam is salty water from the Salton Sea.
The outputs are: generation of electricity and production of fresh water and (alternatively) salt.

- *How do you handle each?*

Regarding "Inputs":
In Phase I - input is oceanic water and will be used for the controlling waterline level of the Salton Sea and for feeding Power Plants for generation of electricity and production of fresh water.

In Phases III, IV & V - there are no inputs such as fuels for the operation of the proposed Power Plant to handle. Chemicals such as lubricant or working fluids or heat exchange fluids are part of the SCI-GHE system which is a closed loop system and at no time is there any contact with the environment by the working fluid or the heat exchange fluid therefore it doesn't pollute the environment. During regular service those working fluids can be safely maintained and/or replaced.

Regarding "Outputs":
In Phase I - high salinity water from the bottom of the Salton Sea is to be dispersed into the vast ocean.

In Phases III, IV & V – Generation of electricity has commercial value. Fresh water as a byproduct has commercial value. Salt as a byproduct has commercial value. If production of salt from Salton Sea is determined to have no commercial value or market become saturated, then production of salt can be stopped and remaining high density salty water from a boiler/distiller can be injected into the main outflow pipeline connecting the San Diego coast and dispersed into the vast ocean.

- *What are the type, volume and composition of waste streams and what are the disposal plans?*

There are no waste streams during operation of the facility using the SCI-GHE system other than high density salty water from a boiler/distiller and it is injected into the main outflow pipeline connecting the San Diego coast and dispersed into the vast ocean (Refer to answer above).
The volume of high density salty water from a boiler/distiller to be injected into the main outflow pipeline connecting the San Diego coast and dispersed into vast ocean is approximately half of the volume of (now) ocean water injected into a boiler/distiller. The other half becomes fresh water.

- *What are your power requirements?*

Some power will be required for building the power plant (Phase III) but not after the facility is in operation because facilities are power plants. Some power will be required for building the main pipeline (Inflow and Outflow) and for circulating fluids (Phase I). By implementing the In-Line Pump (Illustrated and described in FIGS. 22 & 23) as a repetitive segment in the main pipeline (Inflow and Outflow) required power for circulating fluids will be minimized because presented In-Line Pump in downhill route can function as a generator and generates electricity which can be used to supplement the In-Line Pump in horizontal and uphill

route.

- *How will your system respond, or design change, if inflows to the Sea are reduced?*

The objectives of the enclosed concept for restoration of the Salton Sea are:

1. Raising and stabilizing the lake's waterline level by connecting the Salton Sea with Pacific coast (Phase I);

2. Preventing further pollution of the lake by building two main dikes forming a central mass of water and two peripheral reservoirs for containing and treating farmland runoff waters and providing wildlife sanctuary (Phase II);

3. The equalizing salinity of the Salton Sea with the salinity of the Oceanic water and subsequently providing conditions for tourism and making Salton Sea a renewed recreational destination (Phase I & II); and

4. Harnessing prevalent geothermal source of the Salton Sea Geothermal Field (SSGF) for generation of electricity and production of fresh water – both having commercial value (Phase III, IV & V).

It would be unfortunate if raising and stabilizing the lake's waterline level by connecting the Salton Sea with Pacific coast (Phase I) is not implemented because it is foundation for additional phases which generate electricity, produce fresh water and revenue. Assuming that the Salton Sea Authority will recognize the importance of this proposal for our community, economy and environment, it is imperative that the Salton Sea Authority inform everyone that has potential and power to voice and do its best on local, state and federal level in providing funding for implementation of this proposal, especially Phases I & II. In the worst case if the Salton Sea Authority, for whatever reason, fail to recognize importance of this proposal and are unable to voice message and organize proper funding campaign for this proposal for the restoration of the Salton Sea on local, state and federal level then presented power plants with the SCI-GHE system can be slightly modified to function solely as binary power units to generate only electricity. In this worst case the amount of power plants would be limited and fresh water wouldn't be produced and the lake and tourism would disappear.

- *Many of the proposals we receive are for water treatment technologies that have been used in ecosystems or ponds that are 1% or less the size of the Salton Sea; scale your system appropriately to meet the needs identified under Section 2, Problem Definition. Please include an estimated project schedule that includes planning, design and construction durations.*

The proposal for restoration of the Salton Sea consists of five Phases:

Phase I – Connecting the Salton Sea with the Ocean (San Diego, Oceanside area) with several pipelines (inflows and outflows);

Phase II - Building two main dikes - One at northern and one at southern part of the Salton Sea.

Phase III – Building one power plant using (SCI-GHE) system at one of selected sector;

Phase IV – Building several more power plants using (SCI-GHE) system - one in each selected sector; and

Phase V – Continued buildup of additional power plants using (SCI-GHE) system at each selected sector;

The above question in this section is based on having in mind water treatment technologies. The Phase II of this proposal covers concept of this issue. Phase II consists of building two main dikes forming a central mass of water and two peripheral reservoirs - one at northern and one at southern part of the Salton Sea – for containing and treating runoff water from nearby farmland before pumping it back and reusing it for farmland and providing wildlife sanctuary.

Having a central mass of water to be replaced with oceanic water (Phase I) and having two reservoirs - one at northern and one at southern part of the Salton Sea - for treatment of farmland runoff waters drastically reduces the volume of the water to be treated.

An example for the treatment of wastewater can be the Arcata Wastewater Treatment Plant and Wildlife Sanctuary. It is an innovative sewer management system employed by the city of Arcata, California. A series of oxidation ponds, treatment wetlands and enhancement marshes are used to filter sewage waste.

Preliminary design and scale of the two main dike systems forming a central mass of water and two peripheral reservoirs for containing and treating farmland runoff waters consist of several smaller treatment ponds are illustrated in FIGS. 37 & 38.

It is important to mention again that treatment of farmland runoff waters is just one phase (Phase II) of the proposal and necessary part of the whole project.

Work on Phases I, II and III can start at the same time. Phase III consists of building one power plant using (SCI-GHE) system at one of selected sector. The proposed power plant is a modular power unit. Many additional power plants can be built. Just for understanding the concept the schematic plan of one modular unit of the power plant with the SCI-GHE system is illustrated in conceptual drawings FIGS. 41 - 47 (See accompanying Appendix below).

This proposal is a preliminary presentation of the function of the system. If there is a community effort to restore the Salton Sea and a budget provided for it, then final design and planning, including development of a new drilling system which will speed up the process and in the long term reduce the final cost of the whole project, could be accomplished in approximately 12 months. Construction of the first modular power unit with 6 wellbores could be accomplished in around 18-24 months. Completion of the first power plant with an additional 18 wellbores could be accomplished in around 18-24 months. As construction of the first power plant progresses and with experience gathered from the first modular unit, we could start forming additional teams and start building new power plants without waiting for completion of the first power plant. In the following decades, many power plants could be built in the Salton Sea Geothermal Field (SSGF). The Salton Sea Geothermal Field (SSGF) has potential to supply electricity to California and neighboring states. Implementation of this proposal will be a continuing process in the right direction.

4. Other Applications

Please address the following questions:

- *Where has this technology or process been applied and what problem was it "solving"?*

Proposed methodology has not been demonstrated yet, however, the Scientific Geothermal Technology uses proven technologies in unique combinations. It is not difficult to understand and evaluate the concept. I am using this opportunity for restoration of the Salton Sea to introduce the SCI-GHE system modified so to generate electricity and produce fresh water from a salty body of water in area prevalent with geothermal sources.

- *How successful was it?*

The "Scientific Geothermal Technology" is a new methodology for harnessing geothermal energy and has not been used in the industry, yet but it is a relatively simple system, especially the SCI-GHE system which is modified for this application.

- *Can the efficacy of the solution be verified independently?*

Any objective person with a basic understanding of mechanical engineering and thermodynamics would be able to evaluate the process. The main attribute of my concept is the simplicity of it and the necessity for it.

- *If so, by whom (please provide contact information)?*

Note that the Salton Sea Reclamation Act of 1998 requires us to consider "proven" technologies; consequently, such documentation of your solution's application elsewhere is important.

The "Scientific Geothermal Technology" uses proven technologies in unique combinations - however, minor adjustments and modifications are not difficult to accomplish. The "Scientific Geothermal Technology" consists of proven technologies configured so as to function in confined spaces such is a wellbore.

5. Cost Estimate

Provide a cost estimate of building your solution at the Salton Sea (capital costs). Also provide an annual estimate of operations, maintenance, energy and replacement costs (OME&R). Describe your proposed financing strategies and any aspects of your system(s) that subsidize the cost or provide a profit.

Although I do not have an exact cost estimate at this time it is important to understand the importance of implementation of this proposal for restoration of the Salton Sea and the ratio of its cost and benefits. Whatever initial cost to build the Phase I & II is going to be - $2 billion, $3 billion or even $4 billion - it is imperative that we do it because it is the foundation for subsequent phases which have great potential for generating revenue in the hundreds of billions of dollars, economic development and clean environment. The In-Line Pump (illustrated in FIGS. 22 & 23) should be used for two way pipelines connecting the Salton Sea with Pacific coast because this system requires the least energy for operation. Each In-Line Pump is an efficient pumping device and would reduce the final cost of the project. It functions as a

generator at downhill flow routes – it generates electricity, which can be added as a supplement to energy needed for uphill and horizontal flow routes. We should have at least 3 bidders (contractors) and select one with most affordable price and best credentials. The Salton Sea Authority should inform local politicians about this proposal and should initiate an aggressive effort on state and federal level asking for a grant or long term loan for implementation of the Phase I & II. As is the case with any new technology, it is difficult to predict the exact costs for development and implementation of the "Scientific Geothermal Technology" but because of the unique location, having a source of heat - mantle plume under the Salton Sea Geothermal Field (SSGF) - and the simplicity of the system, the revenue generated from harnessing geothermal energy is expected to be in the hundred billions of dollars in several decades and will continue generating such revenue in the future. Therefore, whether initial expenses of the project are $9 billion or $17 billion dollars is less relevant in comparison to long term benefits gained for economy and environment.

Another strong point of proving irrelevancy of the initial cost of the project is that in a recent report, the Oakland-based Pacific Institute projected that without action to address the Salton Sea's deterioration, the long-term social and economic costs — in higher health care costs and lower property values, among other costs — could range between $29 billion and $70 billion over the next 30 years.

The ratio of cost and benefits of this proposal for restoration of the Salton Sea can be compared to the ratio of cost and benefits of the Hoover Dam.

This proposal is a conceptual solution for restoration of the Salton Sea containing several alternative solutions. Final and the best solution can be selected after consultations with the Salton Sea Authority, local, state, federal and other relevant authorities. For a more detailed presentation and cost estimate more consultations with the Salton Sea Authority are needed about willingness, commitment, intensity of startup, and the budget.

I would like to emphasize that the cost for implementing the "Scientific Geothermal Technology" (especially SCI-GHE system), instead of conventional technology in construction of new power plants would be less expensive. Power plants implementing the "Scientific Geothermal Technology" will be dealing with fewer constraints and less maintenance expenses resulting in higher return on investment.

It is self evident that the SCI-GGG and/or SCI-GHE system will outperform any conventional geothermal power plant at the same location. How? – Because "Scientific Geothermal Technology" uses several completely closed loop systems and only absorbs heat from the heat source. It neither injects fluids into the ground, nor pumps up geothermal fluids on the ground surface. Ground fluids do not pass through the equipment.

Money shouldn't be an issue in this case. We are talking about eco-friendly energy solution for our current and future generations. We are talking about preventing further build up of greenhouse gases in the atmosphere and preserving our ecosystem and existence of our planet as we know it. We are talking about saving hundred billions of dollars, which we spend every year on imported oil. We are talking about new technology that our economy desperately needs. We are talking about the beginning of a new age in human history.

6. Self-Evaluation

Please address the following questions:

- *Is your proposal similar to one found in the referenced "Salton Sea Alternative Evaluation Final Report, 9/97 or Salton Sea Restoration Program Preferred Alternative Report and Funding Plan, 5/07"?*

My proposal is a preeminent system for harnessing efficiently geothermal energy. In this application for restoration of the Salton Sea the system is modified to use salty water for generation of electricity and production fresh water. Alternatively, if needed, salt can be produced.

The objectives of the enclosed Proposal for Restoration of the Salton Sea are:

1. Raising and stabilizing the lake's waterline level by connecting the Salton Sea with Pacific coast (Phase I);

2. Preventing further pollution of the lake by building two main dikes forming a central mass of water and two peripheral reservoirs for containing and treating farmland runoff waters and providing wildlife sanctuary (Phase II);

3. The equalizing salinity of the salty terminal lake (Salton Sea) water with salinity of the oceanic water and subsequently providing conditions for tourism and making Salton Sea a renewed recreational destination (Phase I & II); and

4. Harnessing prevalent geothermal source of the Salton Sea Geothermal Field (SSGF) for generation of electricity and production of fresh water – both having commercial value (Phase III, IV & V**).**

- *If so and rejected therein, why should your proposal be considered now?*

I submitted a conceptual proposal to the Salton Sea Authority in January 12, 2014. I had meeting with members (3) of the Salton Sea Authority on May 14, 2014 at which I also discussed FIGS. 37 & 41. After a short presentation (time imposed to only several minutes) my impression was that members like my concept. Since that time I didn't hear officially from the Salton Sea Authority. In the meantime, I am submitting an addition with several more drawings elaborating more on the main concept.

My proposal is unique and should be considered very seriously because it provides benefits in many sectors: It provides a feasible solution for restoring the Salton Sea; It provides conditions for developing truism; It provides generation of electricity with no pollution; and it provides fresh water. All of those beneficial sectors will generate revenue and will break even with an initial investment in a few decades and will continue generating profits in the future with minimal maintenance expenses. This method is self sustained, environmentally friendly and has great commercial potential.

- *How quickly will your system "fix" the problem identified (show calculations)?*

Presented proposal for restoration of the Salton Sea consist of several phases. Phase I (connecting the Salton Sea with Ocean) and Phase II (building dikes and ponds for treating runoff waters) are most expensive and most important components for saving the Salton Sea. Phases I & II provides a foundation for additional Phases III, IV, and V (Power Plants) which are main

revenue generating components. Power Plants consist of a modular Power Units. How quickly we can "fix" the problem depends on the budget and how aggressively we approach the implementation of this proposal. Modular implementation of the "Scientific Geothermal Technology" creates immediate revenues and allows the continued buildup of additional modular units. This will be a continuing process in the right direction.

- *What indicators in/at the Sea should be used to measure your system's performance (i.e. how will we know that it is working)?*

Indicators to measure system performance are generation of electrical power, the production of fresh water and desalinization of the Salto Sea. Those factors can be measured every day on site. My concept uses prevalent geothermal energy from the Salton Sea Geothermal Field **(**SSGF**)** to generate electricity without polluting the environment and produces fresh water. It doesn't take excessive expertise for someone to realize that this concept is the way to go forward and in the interest of all of us. How effective my system will be depends on the budget, intensity of startup and a number of power plants we build.

- *Generally, what positive and negative environmental impacts will your project have?*

Positive environmental impacts are:

1. Raising and stabilizing the lake's waterline level and subsequently preventing lake shrinkage and lake's bed exposure which is pending environmental disaster;

2. Desalinization of the Salton Sea and subsequently reviving depleting Eco system;

3. Preventing further pollution of the lake and treating farmland runoff waters and providing wildlife sanctuary;

4. The production of fresh water.

My proposal will not have negative environmental impacts.

- *How would you offset the negative impacts?*

There are no negative impacts.

APPENDIX

The "Self Contained In-Ground Geothermal Generator" (SCI-GGG) system

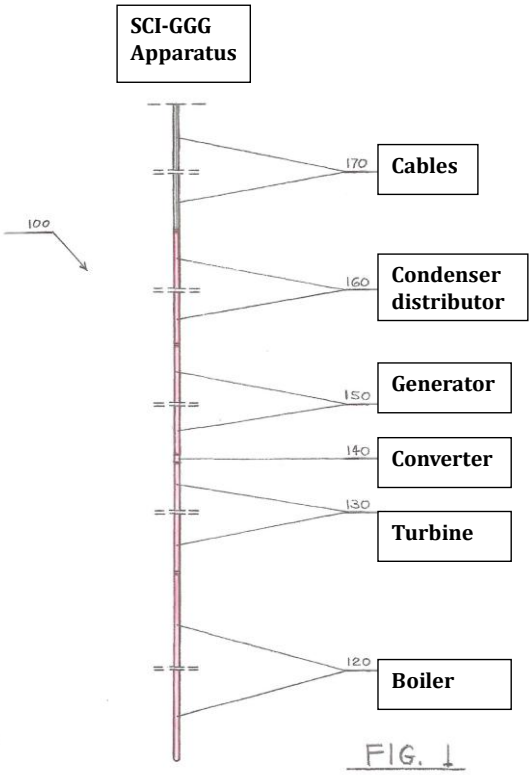

The SCI-GGG system uses several completely closed loop systems and generates electricity down at the heat source and transmits it up to the ground level by means of electrical cables.

The SCI-GGG system consist of:

- A BOILER;
- A TURBINE;
- A CONVERTER;
- A GENERATOR;
- A CONDENSER DISTRIBUTOR;
- CONDENSER and COOLING system (not illustrated here); and
- CABLES

GEOTHERMAL WORLDWIDE, INC.

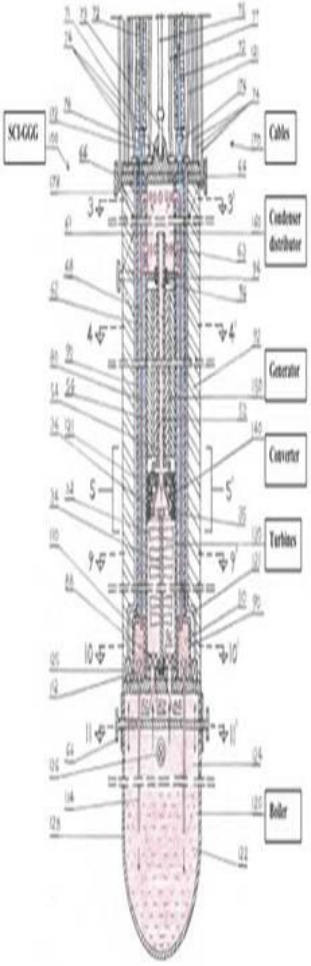

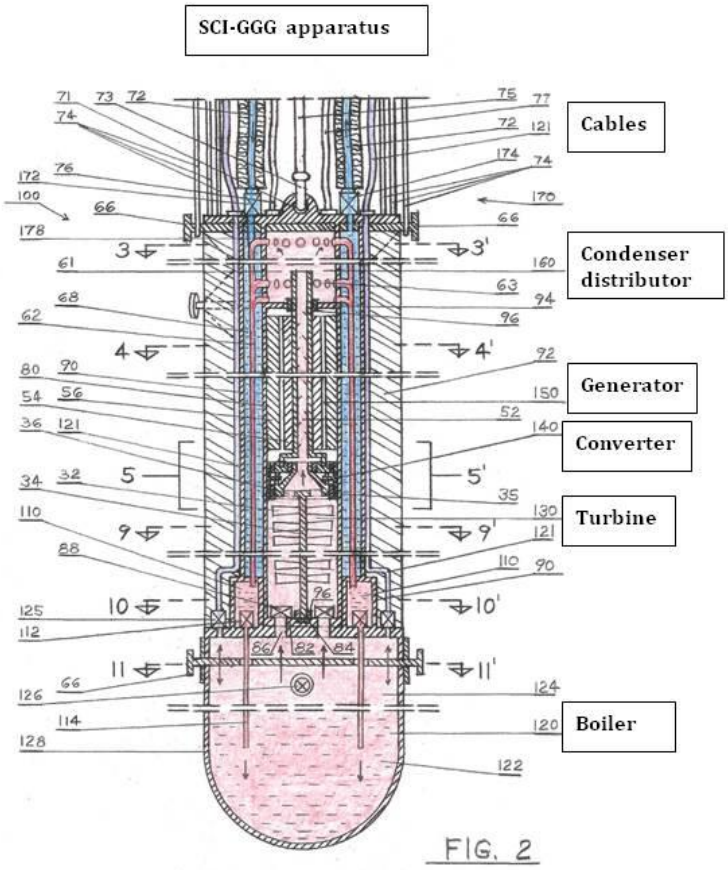

GEOTHERMAL WORLDWIDE, INC.

Cross-sectional views of the SCI-GGG FIGS. 3 and 4

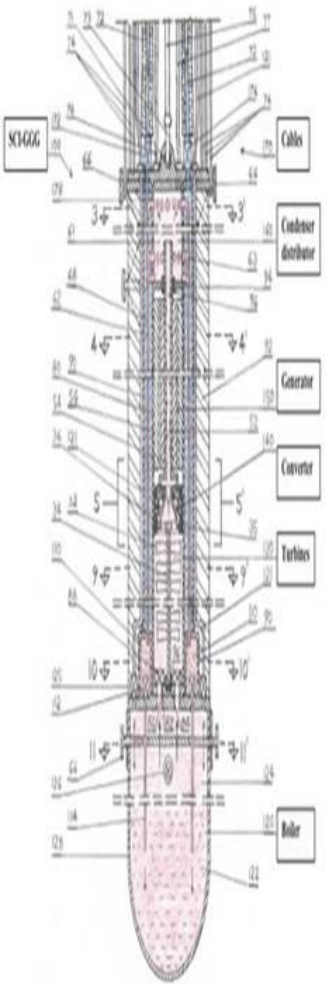

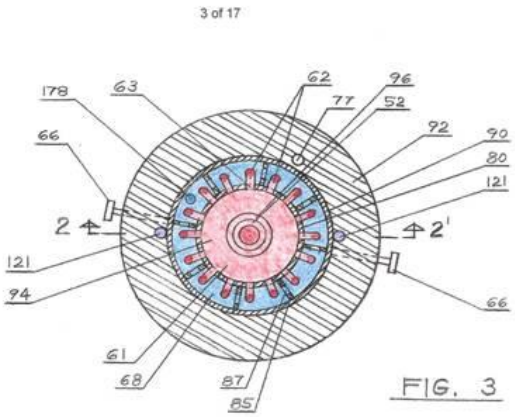

FIG. 3

Cross-sectional view of the SCI-GGG taken along line 3-3' of FIG. 2 through Condenser Distributor

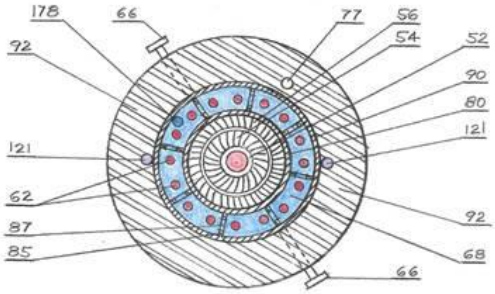

FIG. 4

Cross-sectional view of the SCI-GGG taken along line 4-4' of FIG. 2 through Generator

GEOTHERMAL WORLDWIDE, INC.

The "Self Contained In-Ground Geothermal Generator" (SCI-GGG system)

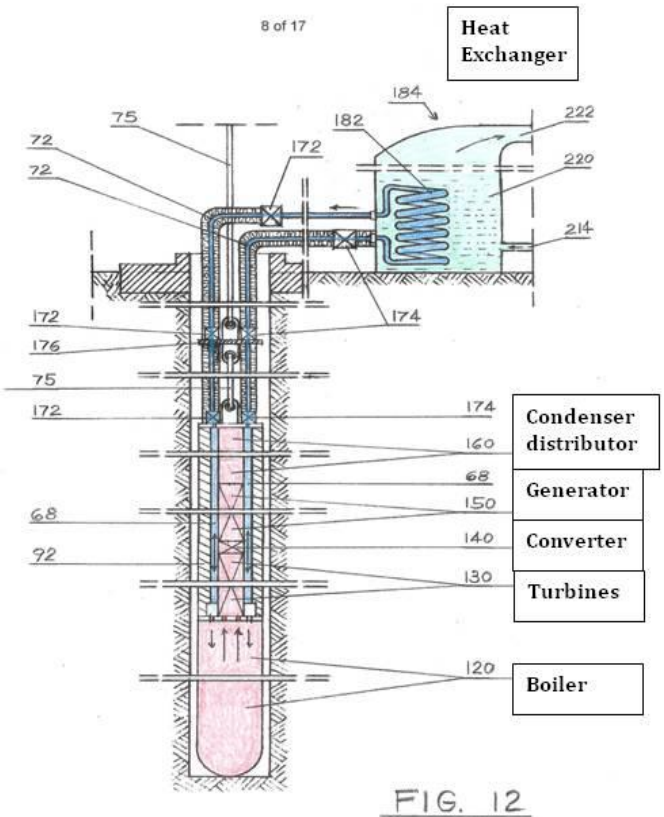

FIG. 12

- The SCI-GGG apparatus is primary system of the "Scientific Geothermal Technology".
- The apparatus generates electricity down at the heat source and transmits it up to the ground level by means of electrical cables.
- It uses three (3) completely closed loop systems:
- First one circulates working fluid through Boiler, Turbine, Generator, Condenser, Boiler.
- Second one circulates heat exchange fluid through Condenser; thermally insulated pipes and coil (Heat Exchanger) on the ground surface.
- Third one circulates working fluid through binary unit (Boiler, Turbine, Generator, Condenser, Boiler) on the ground surface which generates additional electricity.
- Alternatively, third closed loop system can be modified to use salty water for desalinization of large salty body of water.

GEOTHERMAL WORLDWIDE, INC.

The "Self Contained In-Ground Heat Exchanger" (SCI-GHE) apparatus

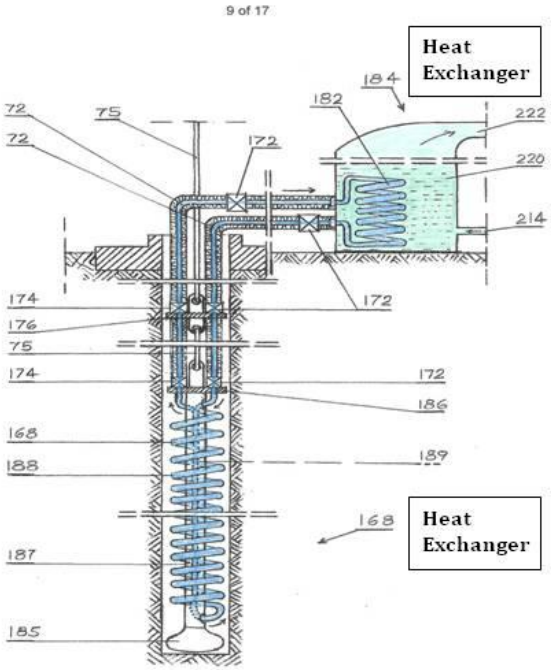

FIG. 13

- The (SCI-GHE) apparatus is an integral part of the "Self Contained In-Ground Geothermal Generator" (SCI-GGG) and is used separately as an independent Heat Exchanger apparatus.
- The (SCI-GHE) apparatus uses at least two completely closed loop systems.
- The (SCI-GHE) apparatus consist of: two coils (Heat Exchangers); a closed loop of thermally insulated pipes **72**; at least one In-Line Pump **172**; and a Binary Power Unit **184**.
- The first coil (Heat Exchanger) **168** of the first closed loop systems is located at the bottom of the well at heat source and the second coil (Heat Exchanger) **182** is coupled to the boiler of the Binary Unit on the ground surface which operates as the second closed loop system - the Organic Rankine Cycle (ORC) – which produce electricity.
- Alternatively, second closed loop system can be modified to use salty water for desalinization of large salty body of water.

GEOTHERMAL WORLDWIDE, INC.

Scientific Geothermal Technology
SCI-GGG and SCI-GHE systems - side by side

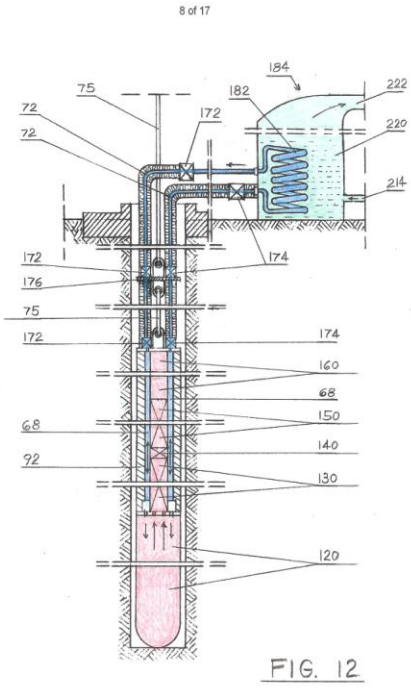

SCI-GGG system

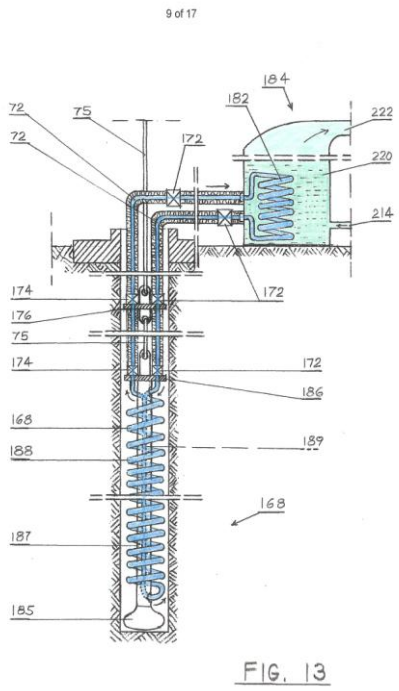

SCI-GHE system

- The SCIG-GGG system generates electricity down at the heat source and transmits it up to the ground level by means of electrical cables.
- The SCIG-GGG system generate additional electricity on the ground surface.
- The (SCI-GHE) system is an integral part of the (SCI-GGG) apparatus and can be used separately as an independent Heat Exchange Apparatus.
- The (SCI-GHE) system has, the less production capacity than (SCI-GGG) system but it is easier to build and maintain.
- The Scientific Geothermal Technology doesn't require hydrothermal reservoirs, although are not limited to dry hot rocks.

GEOTHERMAL WORLDWIDE, INC.

Cross-sectional view of the In-Line Pump taken along line 22-22' of FIG. 23

16 of 17

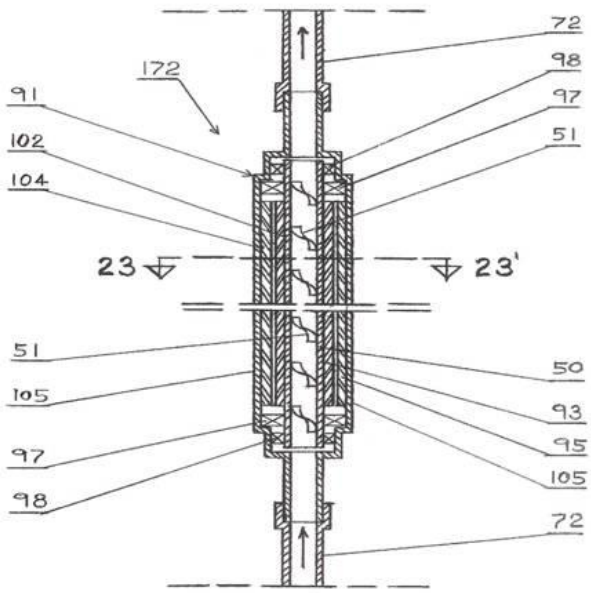

FIG. 22

- The In-Line Pump **172** is an integral part of both SCI-GGG and SCI-GHE systems, circulating fluids through closed loop systems.
- The in-line pump **172** is an electromotor cylindrical shape and is inserted as a repetitive segment in line.
- It has a hollow cylinder shaft of the rotor with spiral blades inside hollow shaft.
- Yields maximum flow rate with limited diameter.

GEOTHERMAL WORLDWIDE, INC.

Cross-sectional view of the In-Line Pump taken along line 23-23' of FIG. 22

17 of 17

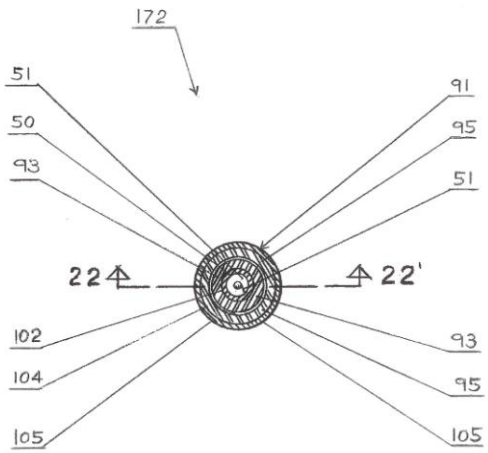

FIG. 23

- Alternatively, the In-Line Pump **172** can be inserted as a repetitive segment of a raiser pipe for pumping fluids up to the ground surface from reservoirs in which geo-pressure is low.
- Also, it can be used in cross-country pipeline for oil, gas, water, etc. as a repetitive segment.
- In downhill route it can function as a generator and generates electricity, which can be used to supplement In-Line Pump in horizontal and uphill route.

GEOTHERMAL WORLDWIDE, INC.

Schematic Cross-Sectional Diagram of an Universal Heat Exchange System 210

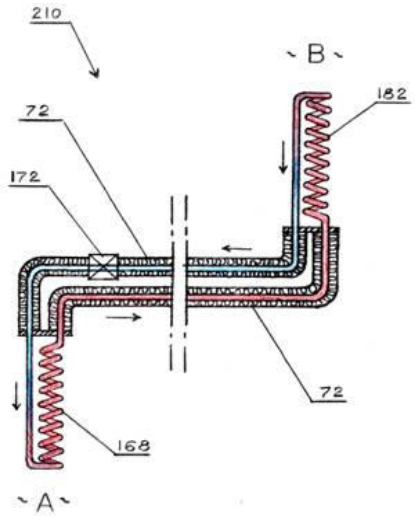

FIG. 24

GEOTHERMAL WORLDWIDE, INC.

FIG. **24** illustrate an schematic cross sectional diagram of an universal heat exchange system **210** with main segments including:

- A thermally insulated close loop line **72** with an in-line pump **172;**
- A first heat exchanger **168** positioned in heat source environment "A"; and
- A second heat exchanger **182** positioned in preferred environment "B";
- By circulating heat exchanging fluid through closed loop system heat is extracted from heat source through the first heat exchanger **168** and transferred through thermally insulated line **72** to the second heat exchanger **182** for external use including production of electricity.
- The heat exchange system **210** is portable and can be used in many applications.

Schematic Plan View of a Power Plant for Production of Electricity in locations such as Hawaii by using SCI-GHE System

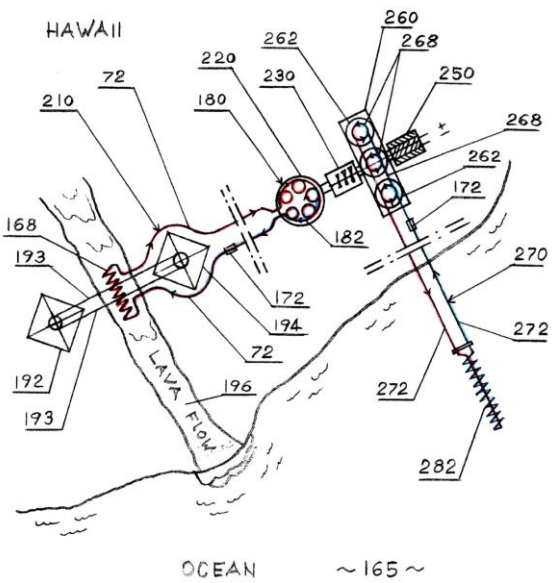

FIG. 26

- Two posts/towers **192** and **194** erected on either side of a lava flow/tube **196** with cable **193** suspended between them.
- Th**e** first heat exchanger **168** is lowered at safe distance close to lava flow **196** and the second heat exchanger **182** is coupled into boiler/evaporator **220** of the binary power unit **180.**
- Heat exchangers **168** and **182** are connected with thermally insulated closed loop system **210** with in-line pump **172** circulating heat exchange fluid.
- Power unit **180** consist of a boiler **220** a turbine **230,** a generator **250** and a condenser **260.**
- Cooling system for the condenser **260** consisting of additional closed loop system **270** with heat exchanger **282** submerged into Ocean **165.**

GEOTHERMAL WORLDWIDE, INC.

Cross-sectional view of a Power Plant for Production of Electricity from heat source such as Oil Well Flare Stacks by using SCI-GHE System

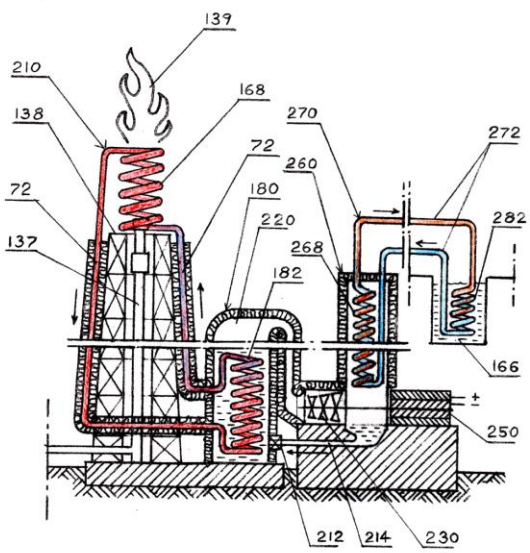

FIG. 27

- Flare stack **137** has support structure **138.**
- The heat exchange system **210** with the first heat exchanger **168** positioned on top of the supporting structure **138** and the second heat exchanger **182** coupled into boiler/evaporator **220** of the binary power unit **180.**
- By circulating heat exchanging fluid through closed loop system **210** heat from flame **139** is extracted through the first heat exchanger **168** and transferred through thermally insulated line **72** to the second heat exchanger **182** which heats working fluid or water, depending on size and temperature, in the boiler **220** of the binary power unit **180.**
- Binary power unit **180,** has turbines **230,** a generator **250** and condenser **260.**
- Condenser **260** is cooled with additional closed loop system **270** consisting of the first heat exchanger **268,** closed loop line **272** and the second heat exchanger **282** which can be submerged into nearby source of cold water.

GEOTHERMAL WORLDWIDE, INC.

Schematic Plan View of a Power Plant for Production of Electricity and Desalinization of the Salton Sea by using SCI-GHE System

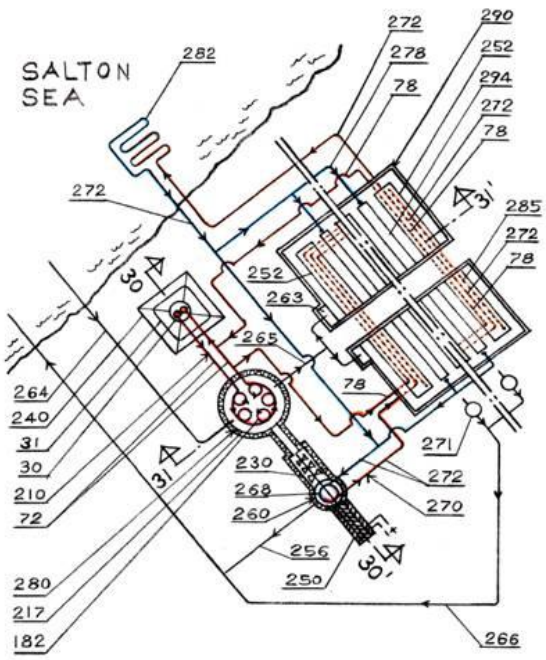

FIG. 29

- The power plant **280** for production of electricity consisting of: wellbore **30**; first closed loop system **210**; distiller **217**; turbines **230**; generator **250**; and condenser **260**;
- Salty water from Salton Sea is injected into the boiler/evaporator **217** through a pipe line **264.**
- Fresh water from condenser **260** is returned to the Salton Sea through line **256**.
- Remaining salty water from distiller **217** is distributed through a pipe line **265** into desalinization processing building **290;**
- Additional closed loop system **270** is used for cooling condenser **260**, heating salty water and cooling condenser in building **290.**
- Fresh condensed water from processing building **290** is returned to Salton Sea through line **260**.
- Produced salt from removable pans **252** is periodically collected, loaded and transported.

GEOTHERMAL WORLDWIDE, INC.

Schematic cross-sectional plan view of a Power Plant taken along line 30-30' of FIG. 29.

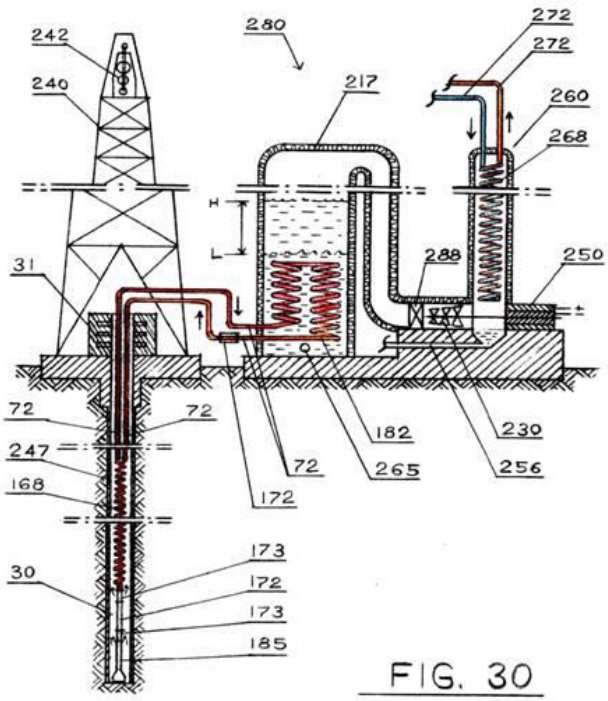

FIG. 30

- The first heat exchanger **168** of the closed loop system **210** is lowered at heat source and second heat exchanger **182** is coupled into boiler/evaporator **217**.
- Salty water from Salton Sea is injected into boiler/evaporator **217** to the level **"H".**
- Salty water is heated by heat exchanger **182** and steam is produced which spins turbine **230** which drives generator **250** which generates electricity.
- The power unit **280** has the condenser **260** which is cooled with additional closed loop system **270.**
- Fresh water from condenser **260** is returned to Salton Sea through line **256**.
- Remaining salty water, level **"L",** from distiller **217** is distributed through pipe line **275** into desalinization processing building **290;**

GEOTHERMAL WORLDWIDE, INC.

Schematic cross-sectional view of a Power Plant taken along line 31-31' of FIG. 29.

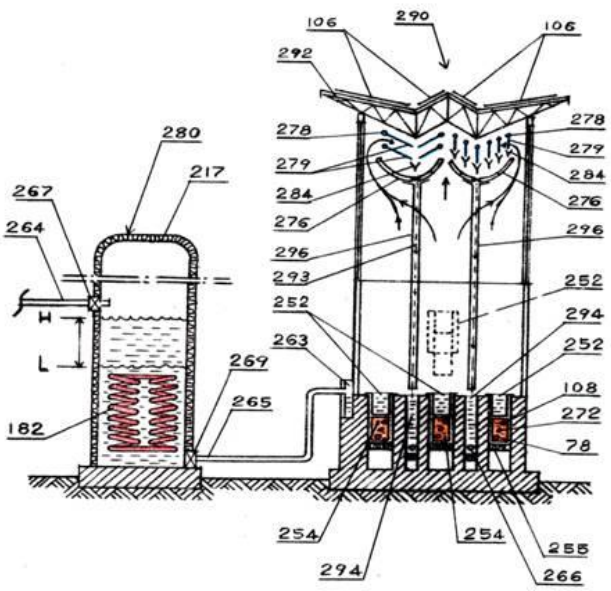

FIG. 31

- Remaining, more concentrated, salty water, now level **"L"**, from distiller **217** is distributed through pipe line **265** into removable pans **252** in desalinization processing building **290;**
- Salty water in removable pans **252** is heated by system of pipes from first closed loop system **210** and from cooling condenser **260.**
- Evaporated moisture is condensed through system of condensers **279** at upper portion of the building and funneled through tubes **296** into fresh water channels **294.**
- Produced salt from removable pans **252** is periodically collected, loaded and transported.

GEOTHERMAL WORLDWIDE, INC.

Schematic cross-sectional view of an alternative heat exchange system to be used in desalinization plant shown in FIGS. 29-31

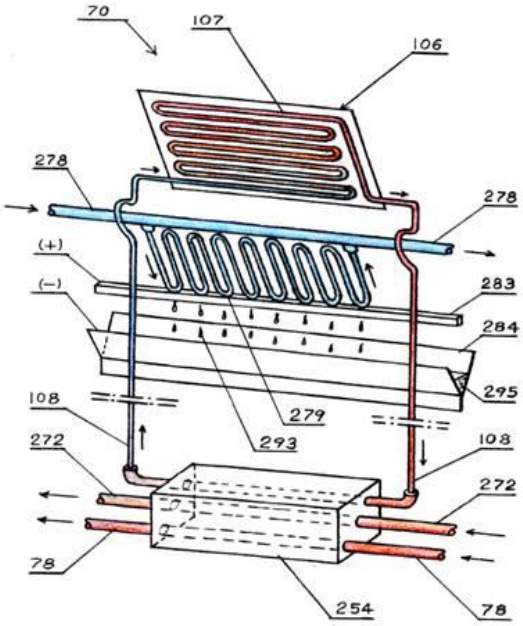

FIG. 32

- FIG. **32** illustrates a perspective cross sectional diagram of an alternative thermo-solar heat exchange system **70** to be used in desalinization plant shown in **FIGS. 29-31.**
- Here is illustrated, an optional solution, a thermo-solar panel **106** positioned on the roof of the desalinization processing building **290** to be used for heating heat exchange fluid in the containers **254** and indirectly heating salty water in pans **252** to induce evaporation.
- This system can function with geothermal support or independently.

GEOTHERMAL WORLDWIDE, INC.

Proposal for Restoration of the Salton Sean

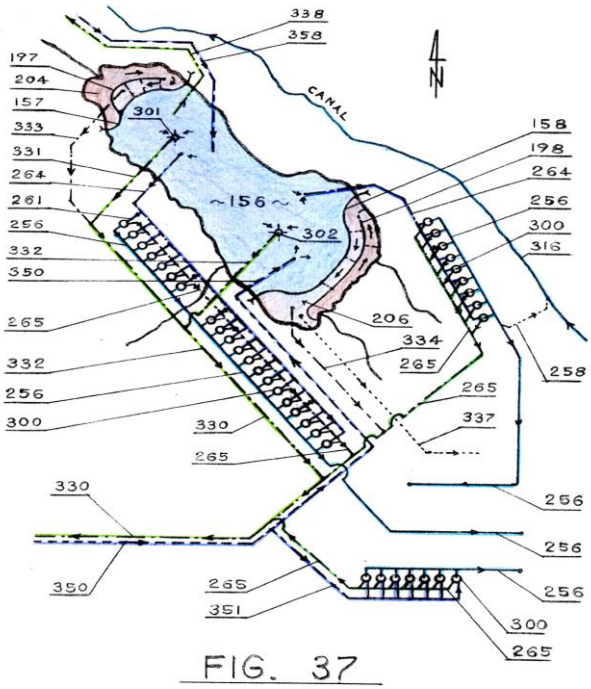

FIG. 37

- **156** – Salton Sea.
- **157** & **158** - Dikes forming ponds **204** & **206** for collecting and treating runoff water.
- **330** – Outflow pipeline taking out high salinity water from the Salton Sea and dispersing it into vast ocean.
- **350** - Inflow pipeline bringing water from Pacific Ocean (San Diego area) to the Salton Sea.
- **300** – Power Plants.
- **256** – Fresh water line.

GEOTHERMAL WORLDWIDE, INC.

Proposal for Restoration of the Salton Sean
Alternative cooling System

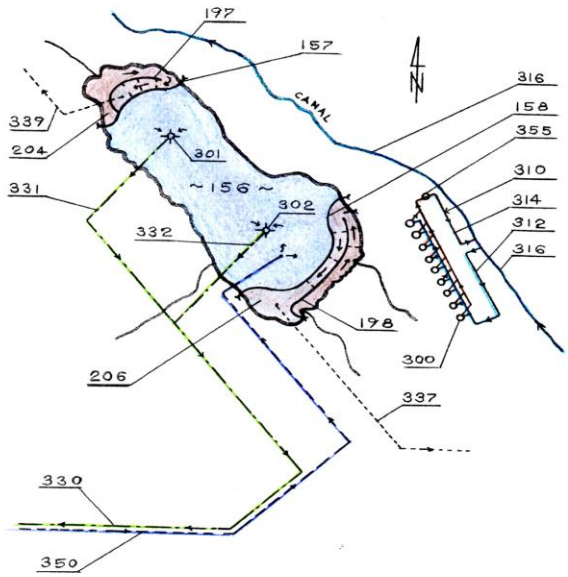

FIG. 38

- **156** – Salton Sea.
- **300** – Power Plants.
- **316** – Canal.
- **310** – Closed loop cooling system using water from canal.
- **312** – Inflow cooling line.
- **314** – Outflow cooling line.

GEOTHERMAL WORLDWIDE, INC.

Proposal for Restoration of the Salton Sean
Power Plants Southeastern Sector

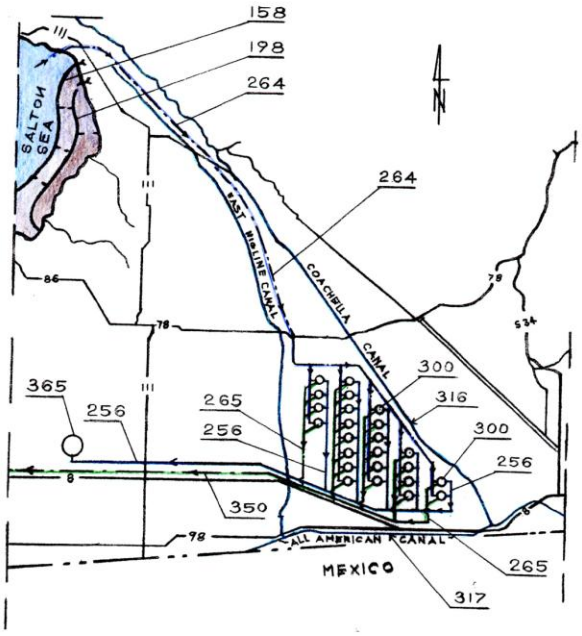

FIG. 39

- **156** – Salton Sea
- **158** & **198** Dikes forming ponds for collecting and treating runoff water.
- **264** – Oceanic water.
- **300** – Power Plants.
- **265** – High salinity line.
- **256** – Fresh water line.

GEOTHERMAL WORLDWIDE, INC.

Proposal for Restoration of the Salton Sean
Power Plants Southeastern Sector - Alternative cooling System

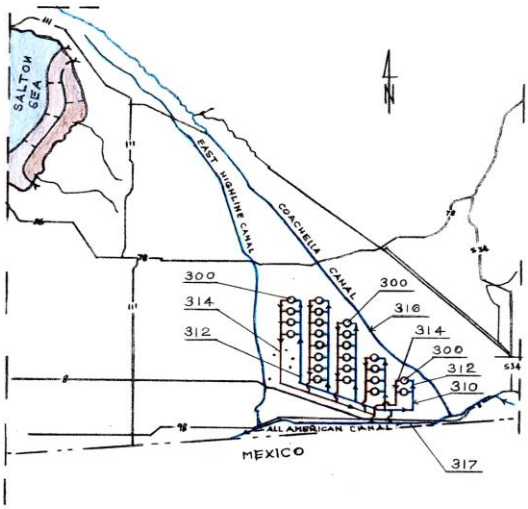

FIG. 40

- **156** – Salton Sea.
- **300** – Power Plants.
- **317** – Canal.
- **310** – Closed loop cooling system using water from canal.
- **312** – Inflow cooling line.
- **314** – Outflow cooling line.

GEOTHERMAL WORLDWIDE, INC.

Power Plant

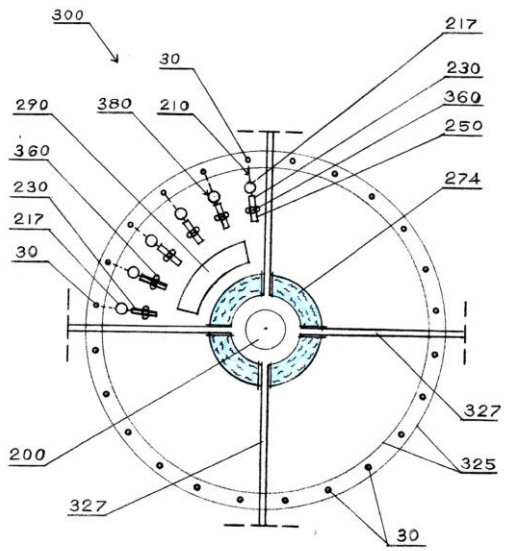

FIG. 41

- **300** – Power Plant.
- **30** - Wells.
- **380** – Power Units.
- **200** – Control Center.
- **290** – Processing Building.
- **274** - Fresh water pond.
- **210** - Heat Exchange system.
- **325** - Railroad track for maintenance derrick.

GEOTHERMAL WORLDWIDE, INC.

Power Plant – Enlarged One Section

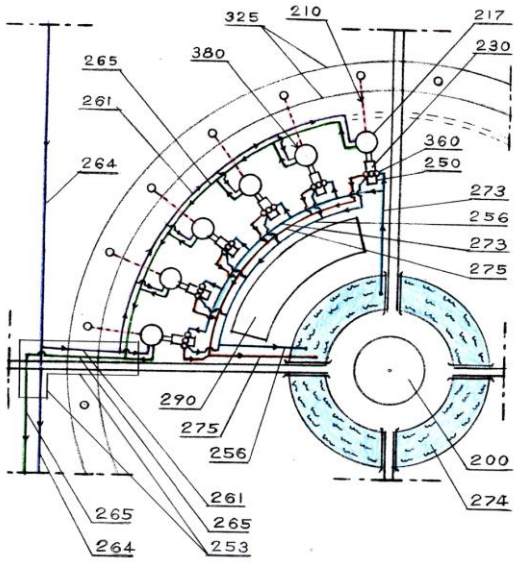

FIG. 42

- **30** - Wells.
- **380** – Power Units.
- **200** – Control Center.
- **290** – Processing Building.
- **274** - Fresh water pond.
- **210** - Heat Exchange system.
- **264** & **261** – Feeding line from Salton Sea to the boiler 217.
- **273** – Inflow cooling line.
- **275** - Outflow cooling line.
- **256** – Condensed fresh water line.

GEOTHERMAL WORLDWIDE, INC.

Power Plant – Enlarged One Section - Alternative

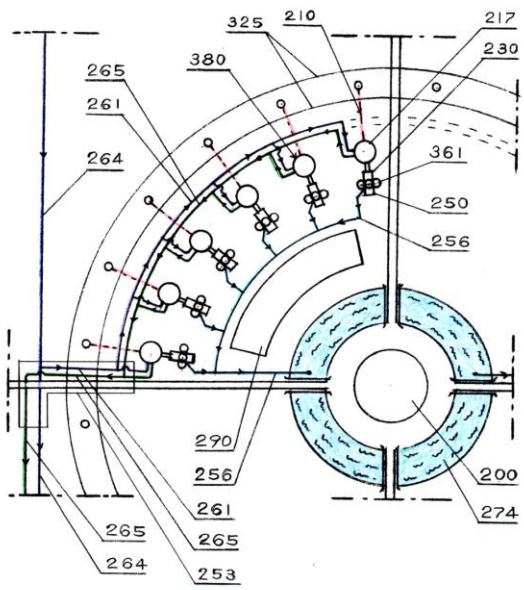

FIG. 43

- **30** - Wells.
- **380** – Power Units.
- **200** – Control Center.
- **290** – Processing Building.
- **274** - Fresh water pond.
- **210** - Heat Exchange system.
- **264** & **261** – Feeding line from Salton Sea to the boiler 217.
- **360** - Condenser with air cooling.
- **256** – Condensed fresh water line.

GEOTHERMAL WORLDWIDE, INC.

Power Plant – Enlarged One Section - Alternative

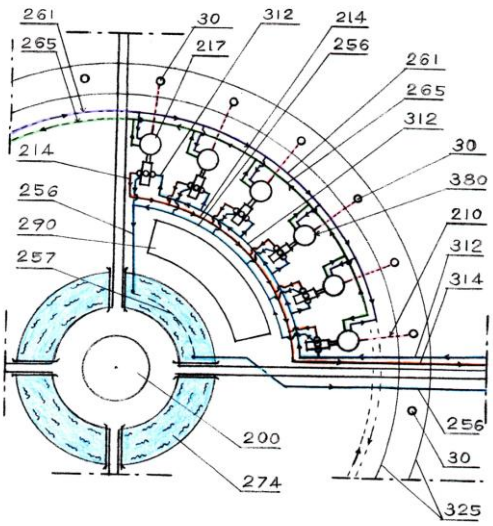

FIG. 44

- **30** - Wells.
- **380** – Power Units.
- **200** – Control Center.
- **290** – Processing Building.
- **274** - Fresh water pond.
- **210** - Heat Exchange system.
- **261** – Feeding line from Salton Sea to the boiler 217.
- **312** – Inflow cooling line - water from canal.
- **314** - Outflow cooling line.
- **256** – Condensed fresh water line.

GEOTHERMAL WORLDWIDE, INC.

Cross-Sectional view of one Power Unit – SCI-GHE System

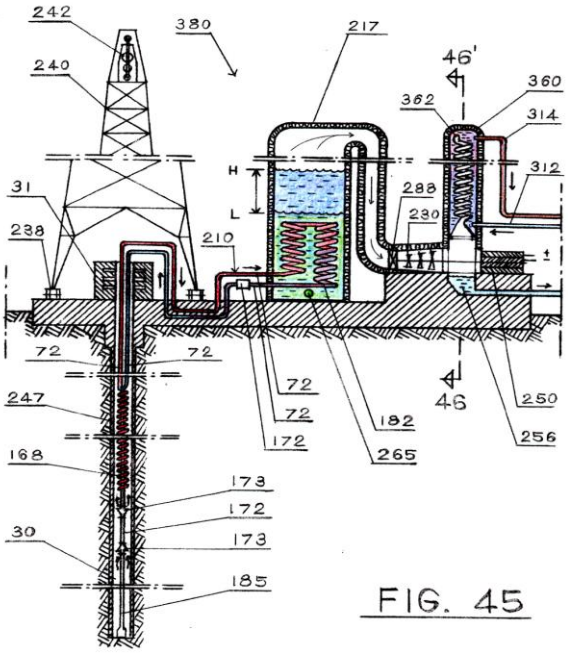

FIG. 45

- **30** - Well.
- **240** - Derrick.
- **380** - Power Units.
- **210** - Heat Exchange system.
- **217** - Boiler / Distiller.
- **230** - Turbine.
- **360** - Condenser.
- **250** - Generator.
- **312** - Inflow cooling line – water from canal.
- **314** - Outflow cooling line.
- **256** - Condensed fresh water line.

GEOTHERMAL WORLDWIDE, INC.

Cross-Sectional view of three Condensers of Power Unit

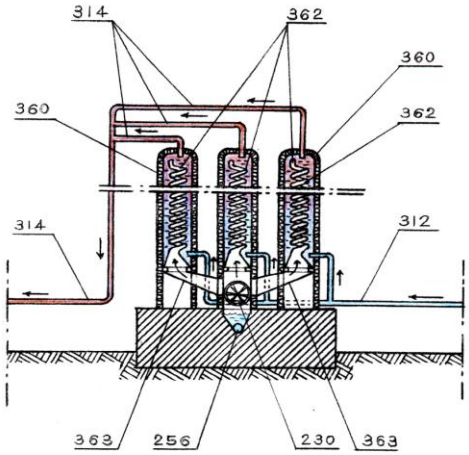

FIG. 46

- **360** - Condenser.
- **362** - Inner Pipes.
- **230** - Turbine.
- **312** - Inflow cooling line.
- **314** - Outflow cooling line.
- **256** - Condensed fresh water line.

GEOTHERMAL WORLDWIDE, INC.

Schematic Plan view of Power Unit with alternative two secondary binary Power Units

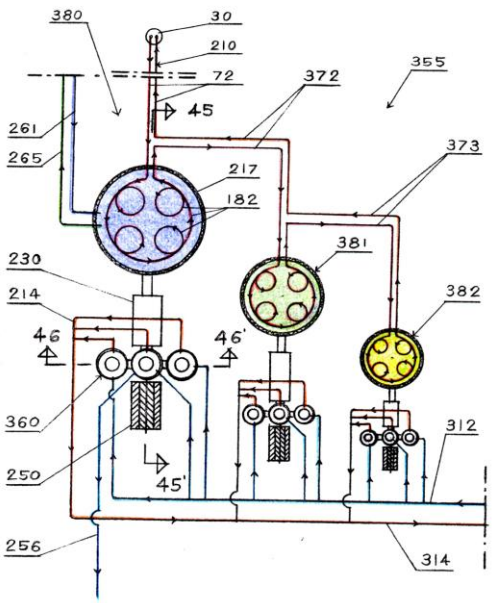

FIG. 47

- **30** - Well.
- **380** - Power Units.
- **210** - Heat Exchange system.
- **217** - Boiler / Distiller.
- **230** - Turbine.
- **360** - Condenser.
- **250** - Generator.
- **312** - Inflow cooling line.
- **314** - Outflow cooling line.
- **256** - Condensed fresh water line.
- **381** & **382** - Binary Power Unit.

GEOTHERMAL WORLDWIDE, INC.

Schematic Plan view of an alternative Power Unit modified for production of electricity, fresh water and extraction of minerals

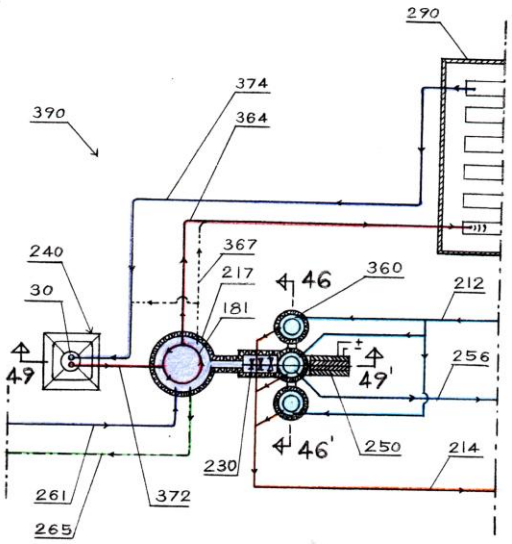

FIG. 48

GEOTHERMAL WORLDWIDE, INC.

- **30** - Well.
- **390** - Power Units.
- **217** - Boiler / Distiller.
- **230** - Turbine.
- **360** - Condenser.
- **250** - Generator.
- **312** - Inflow Cooling Line.
- **314** - Outflow Cooling Line.
- **256** - Condensed Fresh Water Line.
- **372** - Brine Excavation Line.
- **364** - Brine Line to Processing Building
- **374** - Return Brine Line to Well.
- **290** - Processing Building.

Cross-Sectional view of Power Unit modified for production of electricity, fresh water and extraction of minerals

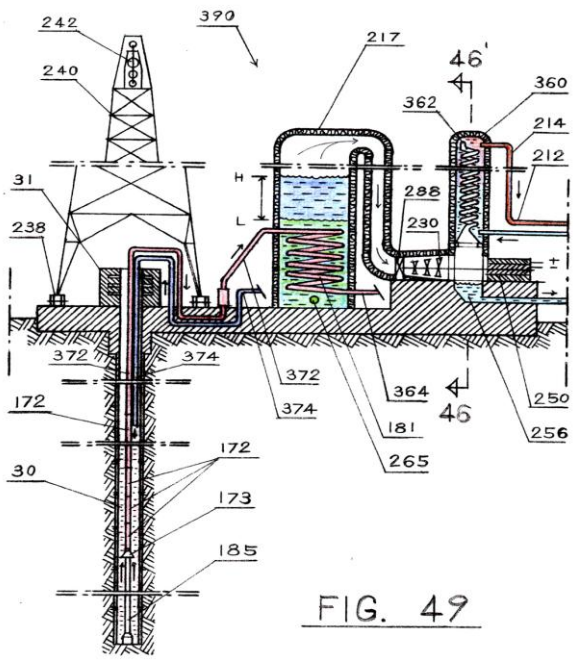

FIG. 49

- **30 -** Well.
- **390 -** Power Units.
- **217** - Boiler / Distiller.
- **230** - Turbine.
- **360** - Condenser.
- **250** - Generator.
- **312** - Inflow Cooling Line.
- **314** - Outflow Cooling Line.
- **256** - Condensed Fresh Water Line.
- **372** - Brine Excavation Line.
- **364 -** Brine Line to Processing Building
- **374** - Return Brine Line to Well.

GEOTHERMAL WORLDWIDE, INC.

Proposal for Restoration of the Salton Sean

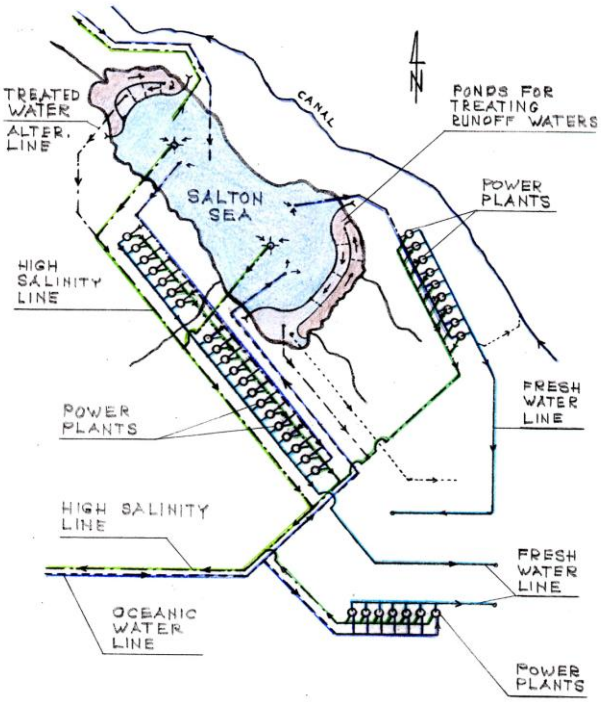

GEOTHERMAL WORLDWIDE, INC.

- **Phase I**: Connecting the Salton Sea with Pacific Ocean with pipelines for controlling waterline level of the lake and exchanging waters and providing conditions for tourism.
- **Phase II**: Production of two sets of dikes – one in northern and one in southern part of the Salton Sea forming ponds for treatment of runoff water and separation of oceanic water.
- **Phase III**: Production of the first Power Plant with SCI-GHE system using geothermal sources for production of electricity and fresh water.
- **Phase IV**: Production of two additional power plants on two additional sectors.
- **Phase V**: Production of subsequent Power Plants.

BACKGROUND AND ADDITIONAL INFORMATION

I am the founder of the Geothermal Worldwide, Inc., and the author of an unrivaled methodology for harnessing geothermal energy for generation of electricity without polluting the environment. I am also the author of an innovative methodology for drilling faster, deeper and wider well-bores "Apparatus for Drilling Faster, Deeper and Wider Well-bore".

My methodology, the "Self Contained In-Ground Geothermal Generator" (SCI-GGG); "Self Contained In-Ground Heat Exchanger" (SCI-GHE) systems; and "In-Line Pump"; commonly called "Scientific Geothermal Technology", is a new approach for harnessing geothermal energy – a much better way than conventional geothermal systems and/or experimental Enhanced Geothermal Systems (EGS), both of which have serious shortcomings.

In summary – We all know that there is an enormous source of energy under our feet whether it is a few miles underground or on the surface in locations such as Hawaii. The question was, until now, how to harness it expediently and efficiently?

The "Scientific Geothermal Technology" consists of several designs and variations complementing each other. They can operate separately in many different applications in the energy sectors.

The **SCI-GGG** system uses several completely closed loop systems and generates electricity down at the heat source and transmits it up to the ground level by means of electrical cables. The SCI-GGG apparatus consist of a boiler, a turbine, a generator and a condenser. The boiler is exposed to the source of heat. The engine compartment is thermally insulated and cooled with a second closed loop system which is engaged with a third closed loop system at ground level and generates additional electricity.

By lowering the SCI-GGG apparatus in a predrilled well bore to the hot substrate of the Earth's crust, electricity is generated below the ground and transmitted up to the surface by cable and subsequently through existing electrical grids to residences and industry.

The **SCI-GHE** system is an integral part of the SCI-GGG system and can be used separately as an independent heat exchange apparatus. The SCI-GHE apparatus consist of: two coils (heat exchangers); a closed loop thermally insulated line; at least one in-line pump; and a "binary power unit".

By lowering a first coiled pipe (heat exchanger) in a predrilled well bore to the source of heat (hot rocks or hydrothermal reservoir) heat is absorbed and transported with circulating fluid through a thermally insulated closed loop line to the second coiled pipe (heat exchanger) which is connected with a second closed loop system (binary power unit) at ground level which generates electricity by using Organic Rankine Cycle (ORC) which is then transmitted through the electricity grid to residences and industry.

The **IN-LINE PUMP** is an integral part of the SCI-GGG & SCI-GHE systems designed for circulating fluids through a closed loop systems and can also be used effectively in many applications wherever substantial pumping force is needed. For example, my IN-LINE- PUMP

can be used for pumping up oil from oil wells (reservoirs) in which geo-pressure is low, or any other type of fluid from a reservoir, such as, but not limited to, water or natural gas. The IN-LINE PUMP is an electromotor with cylindrical shape and can be inserted as a repetitive segment. It has no length limitation thereby increasing power to the electromotor and imparts added pumping to circulate fluid at desired speed.

I am confident that my methodology can harness geothermal energy more expediently and in the future completely replaced nuclear, oil and coal as energy sources for the production of electricity.

Presently, I am endeavoring to bring the benefits of my patented technology to the attention of parties that might be interested in licensing my technology.

I am in the process of reaching professionals in the energy industry, academics, and more specifically geothermal professionals, especially those who are in the process of planning or developing new geothermal projects.

I would like to emphasize that the cost for implementing my methodology, (especially SCI-GHE system), instead of conventional technology in the construction of new power plants would be less expensive. Power plants implementing the “Scientific Geothermal Technology” will be dealing with less constrains and less maintenance expenses resulting in higher return on investment.

It is self evident that the SCI-GGG and/or SCI-GHE system will outperform any conventional geothermal power plant at the same location. How? – Because "Scientific Geothermal Technology” uses several completely closed loop systems and only absorbs heat from the heat source. It neither injects fluids into the ground, nor pumps up geothermal fluids on the ground surface. Ground fluids do not pass through the equipment.

Although the main purpose of my systems is to replace nuclear, coal and oil burning power plants, I would also like to mention that my systems, suitably scaled and installed down hole can generate additional revenue by harnessing heat from marginal and abandoned oil well bores.

Since I am searching at this time for producers / licensees’ and investors / shareholders I am mentioning both aspects.

The following addresses the Geothermal Worldwide, Inc.’s Business Model.

With my background in engineering I was able to develop this unrivaled methodology. The main attribute of my concept is simplicity of it and the necessity for it.

I have three patents already issued with broad claims and I have several patent pending applications focusing on details.

The mission of the Geothermal Worldwide, Inc. is licensing the methodology to large capable producers worldwide.

There are 4 licensing proposals;
Licensing for Limited right by a Single Project;
Licensing for Limited right by a Single Country;

Licensing for Limited right by Region;
Licensing for Exclusive right;

Licensing Agreement entitlement requires a licensee to pay a certain percentage of revenue gained from electricity sold. There is also a Partnership Option - (Investors / Shareholders). There is an incentive for early investors.

The advancement of the "Scientific Geothermal Technology" would save a lot of effort, money and most importantly, it would contribute to global economies and a greener environment.

I respectfully urge the members of the Salton Sea Authority to thoroughly review my proposal for restoration of the Salton Sea. Assuming that the Salton Sea Authority will recognize the importance of this proposal for our community, economy and environment, it is imperative that the Salton Sea Authority inform everyone that is involved in the Salton Sea issues - including public. I respectfully urge the members of the Salton Sea Authority to organize further actions and inform everyone that has potential and power to voice and do its best on local, state and federal level in providing funding for implementation of this proposal. Restoration of the Salton Sea and implementation of the Scientific Geothermal Technology is in interest to all of us - not just locally but worldwide. I am eager further to help.

Sincerely,

Nikola N. Lakic
Graduate Eng. Architect

Geothermal Worldwide, Inc.
78-365 Hwy 111, #402
La Quinta, CA 92253
USA
01-760-347-1609
01-760-333-3851 cell
www.GeothermalWorldwide.com
nlakic@Geothermalworldwide.com